BS 7273-4:2015

BSI Standards Publication

Code of practice for the operation of fire protection measures –

Part 4: Actuation of release mechanisms for doors

bsi.

...making excellence a habit.™

Publishing and copyright information

Published by BSI Standards Limited 2015

ISBN 978 0 580 84115 6

ICS 13.220.20

The following BSI references relate to the work on this document:
Committee reference FSH/12/4
Draft for comment 15/30288999 DC

Publication history

First published April 2007
Second (present) edition, June 2015

Amendments issued since publication

Date	Text affected

Contents

List of tables

Summary of pages

This document comprises a front cover, an inside front cover, pages i to vi, pages 1 to 56, an inside back cover and a back cover.

Foreword

Publishing information

This part of BS 7273 is published by BSI Standards Limited, under licence from The British Standards Institution, and came into effect on 30 June 2015. It was prepared by Technical Committee FSH/12, *Fire detection and alarm systems*. A list of organizations represented on this committee can be obtained on request to its secretary.

Supersession

This part of BS 7273 supersedes BS 7273-4:2007, which is withdrawn.

Relationship with other publications

BS 7273 is published in five parts:

- Part 1: *Electrical actuation of gaseous total flooding extinguishing systems*;
- Part 2: *Mechanical actuation of gaseous total flooding and local application extinguishing systems*;
- Part 3: *Electrical actuation of pre-action watermist and sprinkler systems*;
- Part 4 (this part): *Actuation of release mechanisms for doors*;
- Part 5: *Electrical actuation of watermist systems (except pre-action systems)*.

Recommendations for the design, installation, commissioning and maintenance of fire detection and fire alarm systems are given in BS 5839-1. In order to conform to this part of BS 7273, such systems are, for the most part, expected to conform to BS 5839-1. However, some of the recommendations given in BS 5839-1 (e.g. in respect of provision and siting of fire detectors) are modified by recommendations given in this part of BS 7273. Where this is the case, the recommendations given in this part of BS 7273 take precedence for the purposes of actuation of door release mechanisms.

Information about this document

This is a full revision of the standard and introduces the following principal changes:

- To make the standard more straightforward to use and the recommendations more succinct, the text has been shortened and simplified; some of the commentary has been moved to new informative annexes and some of the previous text has been tabulated e.g. a new Table 1 has been introduced, which, for all three categories of actuation, describes and contrasts the conditions under which the interface with a door release mechanism is fail-safe.
- The diagrams relating to the location of smoke detectors in relation to electrically held-open fire doors have been revised. This is intended to make the recommendations clearer and to remove possible confusion where a single diagram has been used to convey several principles applying to detector siting and spacing.
- There have been changes in terminology to assist users of the standard. The designations, A, B and C for categories of actuation are now referred to as ‘Critical’, ‘Standard’ and ‘Indirect’. These better describe the suitability of the different categories of actuation in relation to particular applications.
- The guidance in BS 7273-4:2007, Annex A of the previous standard is now normative and, therefore, the standard includes recommendations (in tables in Annex B of this version) as to which category of actuation is appropriate for a particular application.

Use of this document

As a code of practice, this part of BS 7273 takes the form of guidance and recommendations. It should not be quoted as if it were a specification and particular care should be taken to ensure that claims of compliance are not misleading.

Any user claiming compliance with this part of BS 7273 is expected to be able to justify any course of action that deviates from its recommendations.

Presentational conventions

The provisions of this standard are presented in roman (i.e. upright) type. Its recommendations are expressed in sentences in which the principal auxiliary verb is "should".

Commentary, explanation and general informative material is presented in smaller italic type, and does not constitute a normative element.

The word "should" is used to express recommendations of this standard. The word "may" is used in the text to express permissibility, e.g. as an alternative to the primary recommendation of the Clause. The word "can" is used to express possibility, e.g. a consequence of an action or an event.

Notes and commentaries are provided throughout the text of this standard. Notes give references and additional information that are important but do not form part of the recommendations. Commentaries give background information.

Contractual and legal considerations

This publication does not purport to include all the necessary provisions of a contract. Users are responsible for its correct application.

Compliance with a British Standard cannot confer immunity from legal obligations.

Introduction

It is commonplace for there to be an interface(s) between a fire detection and fire alarm system and various forms of door hardware. The devices actuated by the arrangements described in this part of BS 7273 are frequently used, in the event of fire, to open, release, or unlock doors that form part of the means of escape in the event of fire, or that prevent the spread of smoke and fire into escape routes. Their use might also be required to make buildings, and circulation routes within buildings, accessible for some groups of people, such as those with certain forms of disability.

Typically, the facilities with which it is often necessary to interface the fire detection and fire alarm system comprise of:

a) devices to hold open self-closing fire-resisting doors (e.g. electromagnetic, and acoustically and/or radio-actuated, hold-open devices);

b) devices to secure doors on means of escape (e.g. electromagnetically held locking devices and solenoid-operated locks);

c) powered sliding doors on means of escape, which might be required to open permanently on operation of the fire detection and fire alarm system.

Applications for these facilities are discussed in Annex A. In this standard, the generic term "release mechanism" (see **3.32**) is used to describe the devices or arrangements described in a) to c).

It is essential that the actuation of the door hardware occurs reliably, as a failure to operate might seriously impede the escape of people from fire by, for example, failing to unlock fire exit doors, or by permitting spread of fire or smoke into escape routes. Failure of electronically secured doors to open in the event of fire can also hamper fire-fighting and rescue operations by the fire and rescue service.

There is often an assumption that the arrangements for actuation of the devices and facilities to which this standard refers will be fail-safe. The assumption is made that, in the event of a failure of the fire detection and fire alarm system, doors will be released. This cannot always be assured. For example, if the power supply to an electromagnet fails, the electromagnet will cease to operate, mirroring the situation required in the event of fire. However, on total failure of the main and standby power supplies to the control and indicating equipment (CIE), the power supply to the electromagnet might not necessarily be interrupted, because the supply to the electromagnet can be independent of the supply to the CIE.

No fire protection equipment or facility is totally immune to failure. The level of reliability of the actuation arrangements needs to be commensurate with the risk to people in the event of fire and simultaneous failure of the actuation arrangements to operate (see Clause **4**).

In specifying measures for the interface between door release mechanisms and fire detection and fire alarm systems this standard takes into account the risk to occupants:

1) if the facilities fail to operate in the event of operation of the fire detection and fire alarm system; and

2) if actuation of release mechanisms occurs as a result of events other than fire.

In the case of 2), account might also need to be taken of the risk to persons other than occupants (e.g. the general public). In the case of electronically secured doors, this British Standard assumes that the only means of releasing the locks is the electronic arrangement, and that there is no provision for mechanical release of locks by building occupants (e.g. by means of a thumb-turn or handle). Where such mechanical means of releasing locks is provided, the full application of all recommendations in this part of BS 7273 might not be necessary.

Throughout the United Kingdom, adequate means of escape in the event of fire, and adequate access to buildings, are required under the relevant national building regulations: the Building Regulations 2010 [1], the Building Regulations (Northern Ireland) 2012 [2], and the Building (Scotland) Regulations 2004 [3] and subsequent amendments. Building regulations apply to new building work including, amongst other things, material alterations to means of escape in the event of fire in virtually all existing buildings. Accordingly, approval to fit devices actuated by the arrangements described in this part of BS 7273 might need approval by the relevant building control body.

In England and Wales, adequate means of escape in the event of fire in existing buildings are required under the Regulatory Reform (Fire Safety) Order 2005 [4]. Guidance on this legislation in England and Wales, including the use of release mechanisms for doors, is published by the Department for Communities and Local Government (www.gov.uk). Similar requirements are imposed by equivalent legislation in Scotland [1)] and Northern Ireland [2)]. In each case, the legislation requires that fire precautions, including provisions relating to means of escape, be based on a fire risk assessment. Throughout Great Britain, the Equality Act 2010 [9], and similar legislation in Northern Ireland, requires that, in most buildings, reasonable adjustments to the physical features of premises are carried out to overcome physical barriers to access. Certain devices actuated by the arrangements described in this part of BS 7273 are used to overcome such physical barriers.

Although this part of BS 7273 gives recommendations for the design of the interface between a fire detection and fire alarm system and devices that open, unlock or release doors in the event of fire, this does not necessarily mean that such devices will be acceptable (e.g. under legislation) in all circumstances in all premises. Guidance on this matter can be found in the guidance documents that support legislation and in other relevant British Standards. Often, the acceptability of the devices, and of the type of device used, will be determined by a risk assessment carried out by a competent person. Building control bodies and fire and rescue authorities can give advice in particular circumstances.

1) The Fire (Scotland) Act 2005 [5] and the Fire Safety (Scotland) Regulations 2006 [6]. Guidance on the Scottish legislation is published by Scottish Government (www.scotland.gov.uk).

2) The Fire and Rescue Services (Northern Ireland) Order 2006 [7] and Fire Safety Regulations (Northern Ireland) 2010 [8]. Guidance on the legislation in Northern Ireland is published by Department of Health, Social Services and Public Safety (dhsspsni.gov.uk).

1 Scope

This part of BS 7273 gives recommendations for the design, installation, commissioning and maintenance of electrical control arrangements for actuation of mechanisms that unlock, release or open doors in the event of fire. It applies to all aspects of the interface between these mechanisms and a fire detection and fire alarm system, including interfaces that incorporate acoustic coupling and radio transmission. It does not recommend whether the above mechanisms should, or should not, be used in any given premises, or in any particular circumstances.

The interface arrangements to which this part of BS 7273 applies, include any such arrangements that are designed in the event of fire to:

a) release fire-resisting doors that are normally held in the open position;

b) unlock doors that are normally locked; or

c) cause powered sliding doors to open.

This British Standard does not apply to electrically controlled systems that form part of a smoke venting system. Fire resisting shutters and active fire curtain barrier assemblies are also outside the scope of this British Standard.

This part of BS 7273 does not generally apply to the equipment that holds, releases, locks or unlocks the doors, or that facilitates the opening of powered sliding doors.

NOTE 1 Recommendations are given, where appropriate, for the standards to which some of this equipment needs to conform.

This part of BS 7273 does not apply to products used within the fire detection and fire alarm system that initiate the signal to actuate the door locking or release mechanisms, nor to aspects of the fire detection and fire alarm system concerned with its primary function to give warning in the event of fire.

NOTE 2 Recommendations for the design, installation, commissioning and maintenance of fire detection and fire alarm systems are given in BS 5839-1, which refers normatively to BS 7273 for the interface between a fire detection and fire alarm system and other fire protection systems and equipment.

The scope of this part of BS 7273 is shown diagrammatically in Figure 1.

Figure 1 **Scope of BS 7273-4**

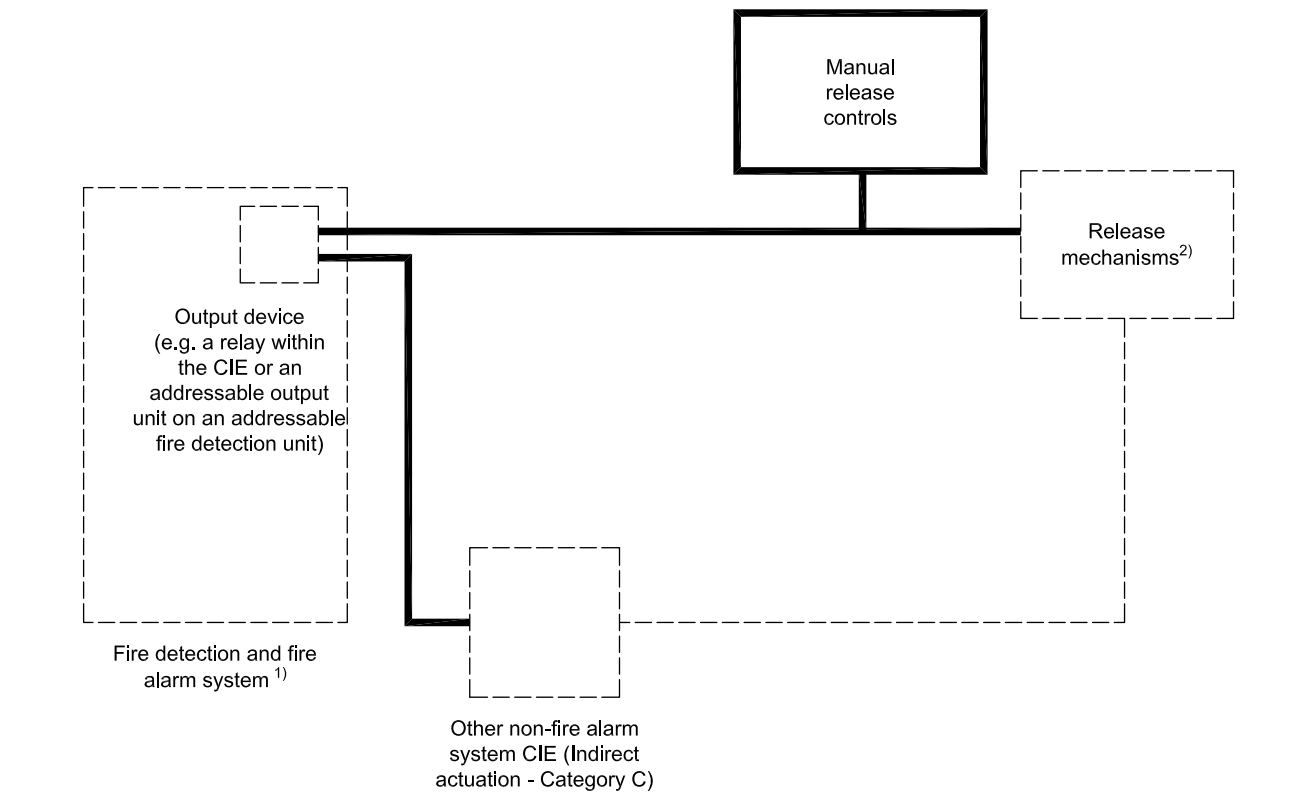

Key

Within the scope of this standard

Outside the scope of this standard

1) Any special recommendations for provision and siting of fire detectors and manual call points are within the scope of this standard.

2) The effect of failures of power supply for the devices is within the scope of this standard.

2 Normative references

The following referenced documents are indispensable for the application of this standard. For dated references, only the edition cited applies. For undated references, the latest edition of the referenced standard (including any amendments) applies.

BS 4422, *Fire – Vocabulary*

BS 4678-4, *Cable trunking – Part 4: Specification for cable trunking made of insulating material*

BS 5839-1:2013, *Fire detection and fire alarm systems for buildings – Part 1: Code of practice for design, installation, commissioning and maintenance of systems in non-domestic premises*

BS 5839-3, *Fire detection and alarm systems for buildings – Part 3: Specification for automatic release mechanisms for certain fire protection equipment*

BS 5839-6:2013, *Fire detection and fire alarm systems for buildings – Part 6: Code of practice for the design, installation and maintenance of fire detection and fire alarm systems in domestic premises*

BS 6724, *Electric cables – Thermosetting insulated, armoured cables for voltages of 600/1 000 V and 1 900/3 300 V, having low emission of smoke and corrosive gases when affected by fire*

BS 7671, *Requirements for electrical installations – IET Wiring Regulations*

BS 7846, *Electric cables – Thermosetting insulated, armoured fire-resistant cables of rated voltage 600/1 000 V, having low emission of smoke and corrosive gases when affected by fire – Specification*

BS EN 54-2, *Fire detection and fire alarm systems – Part 2: Control and indicating equipment*

BS EN 54-11:2001, *Fire detection and fire alarm systems – Part 11: Manual call points*

BS EN 1155, *Building hardware – Electrically powered hold-open devices for swing doors – Requirements and test methods*

BS EN 1527:2013, *Building hardware – Hardware for sliding doors and folding doors – Requirements and test methods*

BS EN 12209:2003, *Building hardware – Locks and latches – Mechanically operated locks, latches and locking plates – Requirements and test methods*

BS EN 16005, *Power operated pedestrian doorsets – Safety in use – Requirements and tests methods*

BS EN 61386-1, *Conduit systems for cable management – Part 1: General requirements*

BS EN 60839-11-1, *Alarm and electronic security systems – Part 11-1: Electronic access control systems – System and components requirements*

BS EN 50133-2-1, *Alarm systems – Access control systems for use in security applications – Part 2-1: General requirements for components*

BS EN 60702-1, IEC 60702-1, *Mineral insulated cables and their terminations with a rated voltage not exceeding 750 V – Part 1: Cables*

BS EN ISO 7010:2012, *Graphical symbols – Safety colours and safety signs – Registered safety signs*

ETSI EN 300 220-1, *Electromagnetic compatibility and radio spectrum matters (ERM) – Short range devices (SRD) – Radio equipment to be used in the 25 MHz to 1 000 MHz frequency range with power levels up to 500 mW – Part 1: Technical characteristics and test methods*

ETSI EN 300 220-2, *Electromagnetic compatibility and radio spectrum matters (ERM) – Short range devices (SRD) – Radio equipment to be used in the 25 MHz to 1 000 MHz frequency range with power levels up to 500 mW – Part 2: Harmonized EN covering essential requirements under article 3.2 of the R&TTE Directive*

ETSI EN 300 220-3, *Electromagnetic compatibility and radio spectrum matters (ERM) – Short range devices (SRD) – Radio equipment to be used in the 25 MHz to 1 000 MHz frequency range with power levels up to 500 mW – Part 3: Harmonized EN covering essential requirements under article 3.2 of the R&TTE Directive*

3 Terms and definitions

For the purposes of this part of BS 7273, the terms and definitions in BS 4422 and the following apply.

3.1 alarm zone
geographical subdivision of the protected premises, in which the fire alarm warning can be given separately to, and independently of, a fire alarm warning in any other alarm zone

3.2 automatic fire detection and fire alarm system
system (other than a single self-contained smoke or fire alarm) in which an alarm of fire can be initiated automatically

3.3 automatic release mechanism
device that can be used for holding a door in the open position against the action of a door closer (**3.10**), and automatically releasing under conditions recommended in this part of BS 7273

3.4 cause and effect
relationship between one or more events. The 'cause' gives rise to, or triggers, one or more other events, and the 'effect' is the consequence of those events

3.5 circuit
assembly of components supplied from a single source and protected against overcurrent by the same protective device(s) or current limitation arrangements

3.6 commissioning
process by which it is determined that the installed system meets the appropriate requirements

3.7 competent person
person with the relevant current training and experience, and with access to the requisite tools, equipment and information, and capable of carrying out a defined task

[SOURCE: BS 5839-1:2013, **3.12**]

3.8 control and indicating equipment (CIE)
component(s) of a fire detection and alarm system through which other components are supplied with power

3.9 critical signal path
all interconnections and communications between a fire alarm system and the input terminals on, or within (a) device(s) provided to open, release or unlock a door, or between CIE and other control equipment by which such devices are controlled (see Figure 1)

NOTE 1 This definition is not the definition of critical signal path given in BS 5839-1.

NOTE 2 Examples of other control equipment include the control equipment of an access control system.

*NOTE 3 In the case of acoustically actuated systems (see Clause **15**), fire alarm sounder circuits are not considered to be part of the critical signal path.*

3.10 door closer
mechanism attached to a door that automatically closes the door provided that the closing force is not overcome by an automatic release mechanism or obstacle

NOTE This device is often described as a self-closing mechanism.

3.11 electric door magnet
device which uses only magnetic attraction to effect or enable locking and/or unlocking

3.12 electrically controlled hold-open system
combination of compatible components which has the function to hold open self-closing fire/smoke control doors, and, in the case of fire, to release these doors for self-closing, at the earliest practicable moment

NOTE This is also known as a "hold-open system".

3.13 electrically powered free-swing door closer
door closer (**3.10**) that allows the door, after an initial opening to a predetermined position, to swing freely anywhere from that position to its closed position without any resistance or damping, and which upon removal of the electrical supply returns the door to the closed position

3.14 electrically powered hold-open device
component of a hold-open system that allows a self-closing fire/smoke control door to remain open at either a preset or a chosen angle until electrically released

NOTE 1 Examples of suitable devices include electromagnets.

NOTE 2 This is also known as a "hold-open device".

3.15 electromagnetic automatic release mechanism
automatic release mechanism (**3.3**) in which electrical energy is converted into a magnetic force that acts directly as the holding force

3.16 electromechanical automatic release mechanism
mechanical holding device that is operated by electrical energy

3.17 electromechanical lock
device using electrically operated means to effect or enable locking and/or unlocking

3.18 electromechanical strike
locking plate using electrically operated means to effect or enable locking and/or unlocking

3.19 fail-safe
electrically controlled actuation arrangements for release mechanism(s) designed such that specified failures result in the release of the door from its pre-actuation state (i.e. held open or locked)

3.20 fire alarm device
component of a fire alarm system, not incorporated in the CIE (**3.8**), which is used to give a warning of fire

NOTE For example, a sounder or visual indicator.

3.21 fire alarm sounder
audible fire alarm device (**3.20**)

3.22 fire risk
combination of the probability of fire occurring and the magnitude of the consequences of fire

3.23 fire signal
signal intended to indicate the occurrence of a fire

3.24 installer
person or organization having responsibility for all or part of the process of installing the measures to which this standard relates

3.25 maintenance
work of inspection, servicing and repair necessary in order to maintain the efficient operation of the measures to which this standard relates

3.26 manual call point
component of a fire detection and fire alarm system that is used for the manual initiation of an alarm

3.27 maximum alarm load
maximum load imposed on a fire alarm system power supply under fire conditions

NOTE This comprises the power required for simultaneous operation of all fire alarm devices, fire signals from all automatic fire detectors and manual call points in the building, any power drawn by other systems and equipment in the alarm condition (including systems and equipment required for compliance with this standard) and any power required for transmission of fire signals to an alarm receiving centre (if a facility for this is provided).

3.28 normal supply
supply from which the fire alarm system is expected to obtain its power usually derived from the public electricity supply system under normal conditions

3.29 pre-alarm warning
early warning of conditions which might (or might not) represent a fire

3.30 protection
presence of one or more automatic fire detector(s) able to initiate actions needed for the safety of life or property in the event of a fire and for actuation of automatic release mechanisms (**3.3**)

3.31 purchaser
person or organization taking primary responsibility for acceptance of, and payment for, the measures to which this standard relates

3.32 release mechanism
device, mechanism or arrangement which:

a) holds open a self-closing door, but releases it on occurrence of a fire signal (**3.23**);

b) secures a door, but causes it to unlock on occurrence of a fire signal; or

c) causes a powered sliding door to open on occurrence of a fire signal

NOTE These actions can also occur in the event of circumstances other than a fire signal (e.g. a fault indication at the CIE of the fire detection and fire alarm system).

3.33 servicing
routine process of work on the measures to which this standard relates, carried out at predetermined intervals

3.34 short circuit isolator
device, which might be connected into a transmission path of a fire detection and fire alarm system, to limit the consequences of low parallel resistance faults between the lines of this transmission path

NOTE A short circuit isolating device can be a physically separate device or it can be incorporated into another device (e.g. integrated into a smoke detector or detector base).

3.35 smoke alarm
device containing within one housing all the components (except possibly the energy source) necessary for detecting smoke and giving an audible alarm

3.36 staff alarm
restricted alarm, following the operation of a manual call point or automatic fire detector, given to certain staff in the premises to permit investigation prior to evacuation and/or summoning of the fire and rescue service

3.37 staged fire alarm system
fire alarm system in which two or more stages of alarm can be given within a given area

NOTE 1 Examples of staged alarm systems are a two-stage system capable of giving "alert" or "evacuate" signals, or a three-stage alarm system capable of giving "staff alarm", "alert" or "evacuate" signals.

NOTE 2 The normal condition, under which no alarm is given, is not counted as a stage of alarm.

3.38 standby supply
electricity supply, commonly from a rechargeable battery, which is automatically connected to the fire alarm system when the normal supply fails

3.39 user
person or organization having control of a building (or part of a building) in which the measures to which this standard relates are installed

4 Categories of actuation

*COMMENTARY ON CLAUSE **4***

The facilities to which this standard refers might be used in a number of applications in buildings, for reasons of:

a) convenience;

b) accessibility; and/or

c) security.

See Annex A for further details on reasons that mechanisms for unlocking and releasing doors are used.

Recommendations on the use and method of actuation of release mechanisms are contained in other British Standards and in guidance on fire legislation. These advise that in principle, actuation of release mechanisms is intended/designed to occur in response to any failure of the fire detection and alarm system, including system error (e.g. failure of the central processing unit) and any electrical failure. In practice, for release mechanisms to fail-safe under any conceivable fault condition, while technically possible, is onerous and in some cases impracticable. All electronic systems have the potential to fail. However, if the recommendations of this standard are followed, the likelihood of failure of a release mechanism to operate correctly on demand is expected to be very low. Since a fire in a building is uncommon, the likelihood of failure of a release mechanism at the time of a fire is then so low as to constitute a tolerable risk in most circumstances.

In the design of the interface between the release mechanism and the fire detection and fire alarm system, account is taken of, at least, a single failure of the equipment or power supplies.

In specifying measures for the interface between door release mechanisms and fire detection and fire alarm systems this standard takes into account the risk to occupants:

1) if the facilities fail to operate in the event of operation of the fire detection and fire alarm system; or

2) if actuation of release mechanisms occurs as a result of events other than fire.

In the case of 2), account might also need to be taken of the risk to persons other than occupants (e.g. the general public).

In some circumstances, in which the fire risk is high and/or the consequences of failure of the electrical actuation arrangements are greatest, account might need to be taken of the possibility of two independent, simultaneous failures of equipment or power supplies at the time of a fire. In these circumstances, the use of release mechanisms might need to be limited or restricted, or additional safeguards might need to be incorporated.

*Normally, the release mechanisms to which this standard applies are actuated directly by an output signal generated at the CIE (**3.8**) of a fire detection and fire alarm system (e.g. change of state of a relay or initiation of an acoustic signal from fire alarm sounders). However, in some cases, the output signal is generated by another system or its control equipment (e.g. the control equipment of an access control system, or control equipment of an electrically controlled hold-open system). In these cases, the additional complexity introduced inherently reduces the reliability of the actuation arrangements. Again, the use of this form of interface might need to be limited or restricted, or additional safeguards might need to be incorporated.*

*As a result of these considerations, the actuation arrangements to which this standard refers are divided into three categories – 'Critical' actuation (Category A),'Standard' actuation (Category B)' and 'Indirect' actuation (Category C). Recommendations on the selection of which category is appropriate are given in **4.1**. The conditions under which each category is fail-safe are given in **4.2**.*

4.1 Selection of category

*COMMENTARY ON **4.1***

'Standard' actuation (Category B) is the category that is likely to be suitable in many situations in which release mechanisms for doors are employed. In these situations, this category of actuation will ensure that the release mechanism will fail-safe when there is either a loss of power to the release mechanism or a fault in the critical signal path.

However, there are situations where the fire risk or the consequences resulting from failure suggest that a more robust arrangement is needed that will fail-safe under a much broader range of fault conditions, including loss of the normal and/or standby power supplies to the fire alarm CIE. In these situations, the more suitable category is 'Critical' actuation (Category A).

Equally, there are situations in which 'Indirect' actuation (Category C) will suffice; in such arrangements, there is no direct communications path between the fire alarm CIE and the release mechanism and the inherent reliability of such an arrangement is, by comparison, reduced.

Annex B gives recommendations on the category of actuation that is appropriate for various situations. In a particular building, a mixture of categories might be appropriate and acceptable.

*While a particular category of actuation might be desirable, the category of actuation might not be technically achievable or reasonably practicable in existing buildings; this might preclude the use of certain door release mechanisms in particular circumstances, alternatively, consideration might be given to acceptance of a variation, subject to the agreement of all interested parties (see Clause **6**).*

4.1.1 The category of actuation that should be adopted in any particular circumstance should be determined from Annex B.

4.1.2 Any specification for actuation of a release mechanism(s) should clearly state the category of actuation required.

4.1.3 The purchaser of the system or their agent should inform the designer of the system as to the category of actuation that is required (e.g. in purchase or tender specifications).

4.1.4 If the designer is not informed as to the category of actuation required, the designer should select the category of actuation from Annex B and should make clear, to the purchaser or their agent, the category of actuation that the designer proposes.

4.1.5 The system commissioning certificate (see Clause **20**) should clearly state the category of actuation that has been installed.

4.2 Description of categories

4.2.1 Critical actuation (Category A)

Where actuation is fail-safe under the following conditions it should be deemed as Critical actuation (Category A):

a) indication at the CIE of any fault condition required to be indicated by BS EN 54-2 (within the time period specified in BS EN 54-2 plus 120 s); and

b) any of the additional conditions given in Table 1.

NOTE 1 Actuation of the release mechanism of doors might not have to occur in the event of a failure or disconnection that affects one or more detectors or callpoints on which the door release does not depend for its correct operation. Depending on the fire strategy for the building e.g. it is unlikely that in the event of a fault affecting fire detectors on one floor of a building cross corridor doors on other floors of the building need to close.

*NOTE 2 Acoustically-actuated systems (see Clause **15**) are not suitable for this category, as, in the event of fault conditions, fire alarm sounders do not operate.*

*NOTE 3 Reference to 120 s in **4.2.1**a) and Table 1 is to facilitate automatic operation of door release mechanisms in the event of faults in arrangements for door release that rely on radio transmission.*

4.2.2 Standard actuation (Category B)

Standard actuation (Category B) should be deemed fail-safe as given in Table 1.

NOTE 1 A fail-safe situation on occurrence of any other fault conditions is not precluded, but the risk to occupants as a result of the unnecessary opening, releasing or unlocking of a door would need to be considered [see commentary text].

*NOTE 2 Acoustically-actuated systems (see Clause **15**) might be suitable for this category, as faults on the fire detection and fire alarm system need not be taken into account.*

4.2.3 Indirect actuation (Category C)

Indirect actuation (Category C) should be deemed fail-safe as given in Table 1.

Table 1 **Conditions under which the interface with door release mechanisms is fail-safe (1 of 2)**

Description	Critical actuation (Category A)	Standard actuation (Category B)	Indirect actuation (Category C)
a) open or short circuit of wiring that forms part of the critical signal path (within 120 s of occurrence);	Yes	Yes	Yes
b) reduction of power supply voltage to below the level at which the door release mechanism can operate correctly in the event of fire (within 3 s of occurrence, except in the case of self-closing fire doors, for which a time of 60 s is acceptable) [A)] unless the operating principle of a door release mechanism inherently causes doors to release on failure of power supply;	Yes	Yes	Yes
c) the simultaneous occurrence of a failure of the normal and standby power supplies of any part of the fire detection and fire alarm system on which the release mechanism depends for its correct operation in the event of fire (within 120 s of occurrence) [B)];	Yes	No	No
d) short circuit or open circuit between the fire alarm CIE and other non-fire alarm control equipment on which the correct operation of the release mechanism depends (within 120s of occurrence);	n/a	n/a	Yes
e) a short circuit or open circuit between separate fire alarm CIE, if the fault could prevent correct operation of the release mechanism in the event of fire (within 120 s of occurrence);	Yes	No	No
f) disablement (e.g. using a control required by BS EN 54-2) of any single manual call point or fire detector (or detection zone), on which the release mechanism depends for its correct operation in the event of fire (within 120 s of occurrence);	Yes	No	No
g) in the case of radio-actuated systems:			
1) a failure of radio communication between the transmission equipment and the release mechanism;	Yes (within 6 mins occurrence)	Yes (within 120 mins occurrence)	Yes (within 120 mins occurrence)
2) short or open circuit of any circuit between the transmission equipment and the fire alarm CIE, external to an enclosure (within 120 s of occurrence)	Yes	Yes	Yes

Table 1 **Conditions under which the interface with door release mechanisms is fail-safe (2 of 2)**

Description	Critical actuation (Category A)	Standard actuation (Category B)	Indirect actuation (Category C)

NOTE A fail-safe situation on occurrence of any other fault conditions is not precluded, but there might be a risk to occupants as a result of the unnecessary opening, releasing or unlocking of a door.

A) BS EN 1155 requires that, upon removal of the electrical supply, and when the applied voltage is reduced to 10% of the rated supply voltage, the device shall release and allow the door to close under the control of the door closing device. BS EN 1155 also requires that the hold-open device shall release within 3 s of the supply being disconnected.

B) Where the actuation of a release mechanism relies on change of state of a relay within the fire detection and fire alarm system, care should be taken to ensure that this condition is satisfied (see commentary on Clause **9**).

5 Exchange of information and definition of responsibilities

*COMMENTARY ON CLAUSE **5***

The design of the interface between the fire detection and fire alarm system and the release mechanism(s) may be undertaken by the supplier, the installer, representatives of the user or purchaser (including consultants), or by a combination of these parties.

5.1 The user or purchaser of the system (or an appointed representative of these parties, such as a consultant) should ensure that, to the extent appropriate, there is consultation, during or prior to the design of the actuation arrangements, with all relevant interested parties (e.g. the building control body and the fire alarm contractor).

5.2 Responsibility for the design of the interface between the fire detection and fire alarm system and the door release mechanism should be clearly defined.

NOTE This is often the designer of the fire detection and alarm system.

5.3 Where the interface between a door release mechanism and a fire detection and fire alarm system is the responsibility of an organization other than the installer of the fire detection and fire alarm system, the responsibility of that organization and any other organization, such as the fire alarm installer, should be clearly defined and documented.

5.4 The designer of the actuation arrangements should ensure that, to the extent appropriate, there is consultation at the design stage with all relevant interested parties within the following list:

a) the user or purchaser;

b) consultants (including architects, mechanical and electrical consultants and fire engineering consultants); and

c) any relevant specialists in respect of the release mechanism.

6 Variations from the recommendations of this standard

*COMMENTARY ON CLAUSE **6***

In some circumstances, variations from the recommendations of this standard might be appropriate.

6.1 Variations should be the subject of specific agreement amongst all interested parties and should be clearly identified in all relevant system documentation (e.g. within a specification or design proposal), so that they are obvious to relevant interested parties.

6.2 Any variations identified or proposed during installation or commissioning, but not clearly identified in the documented design, should be documented for subsequent approval (other than in the case of errors or snags for which rectification is proposed).

This recommendation is not intended to imply that design of the actuation arrangements is necessarily the responsibility of the installer or commissioning engineer. However, if variations are identified by an installer or commissioning engineer, particularly variations that were not explicit within a specification, they should be documented for referral to the designer, user or purchaser for agreement or action.

6.3 All variations should be listed in the relevant commissioning certificate (see Clause **20**).

7 Methods of actuation

*COMMENTARY ON CLAUSE **7***

Recommendations on the method of actuation of release mechanisms are contained in other British Standards and in guidance to fire legislation. These suggest that, in principle, actuation of release mechanisms is intended to occur in response to any of the following conditions:

a) operation of the fire detection and alarm system, whether by operation of a manual call point or activation of an automatic fire detector;

b) any failure of the fire detection and alarm system including system error;

c) any electrical power failure; and

d) in the case of electronically locked doors, activation of a manual release control.

*Failure of the fire detection and alarm system is addressed in Clause **4**, whereas this Clause addresses the actuation of the release mechanisms triggered by one or more of the following events:*

1) operation of a manual call point that forms part of a fire detection and fire alarm system;

2) operation of an automatic fire detector (or automatic fire suppression system, e.g. sprinkler head);

*3) use of a control at fire detection and fire alarm system CIE [e.g. the evacuate control recommended by BS 5839-1:2013, **23.2.3**b)];*

use of manual release controls, whether central or local to each door (see Clause **11**); or

4) operation of the fire alarm sounders.

Since the release mechanisms are intended to be actuated in the event of fire, it is normally appropriate for actuation to occur on each occasion that fire alarm sounders operate, regardless of the means by which they are triggered. However, where a staged fire alarm system is provided in a large building that is subdivided into alarm zones, it might not be necessary for simultaneous actuation of release mechanisms throughout the building; when an automatic fire detector operates, it might be sufficient for release mechanisms to be actuated only within certain alarm zones, which would normally include the alarm zone in which the detector is located. When a manual call point is operated, however, it might be operated in a different alarm zone from the location of the fire. Moreover, a manual call point is less likely than, for example, a smoke detector to generate a false alarm. Accordingly, it will normally be appropriate for all release mechanisms in the building to be actuated when a manual call point is operated, even, if, exceptionally, only a staff alarm is given initially in response to operation of a manual call point.

In buildings with a staff alarm, fire alarm sounders do not normally operate when a fire signal is given by a single detector, other than, a heat detector (or sprinkler head). Since there is, during the staff alarm stage, no indication to occupants to evacuate, it is unlikely to be necessary at that stage for release mechanisms that open, or unlock, doors on means of escape to be actuated. However, it might be appropriate for all self-closing fire doors that are normally held in the open position to close to prevent spread of smoke into, or along, escape routes.

Some fire detection and fire alarm systems can provide a pre-alarm warning. This warning is primarily intended to enable investigation of conditions that might give rise to a false alarm. It is not appropriate, therefore, for release mechanisms to be actuated in the event of a pre-alarm warning.

It is not uncommon for persons who discover a fire to report the incident to someone else, rather than operating a manual call point. Often, the report is made to a person who is perceived to be in a position of responsibility, such as a receptionist or night porter in a hotel, the switchboard operator in an office building, or security control room staff in a shopping centre. The action taken by the person to whom the report is made might then be to operate the evacuate control at the CIE of the fire detection and fire alarm system. Under these circumstances, it is necessary for automatic actuation of door release mechanisms.

In premises in which people sleep, it is common practice for release mechanisms on self-closing fire doors to be actuated at night by manual action. This can be achieved by operation of a switch local to each door, or by a central control that actuates all release mechanisms. A central control can also provide a means for testing the operation of the actuation arrangements. However, care is necessary in the provision and use of a central control. Sudden release of a self-closing fire door, without prior warning to occupants, can present a small risk to occupants passing through the doorway, particularly if the occupants are frail or elderly.

Similarly, self-closing doors release when the fire detection and fire alarm system is tested, unless the interface between the system and the release mechanisms is disabled. As BS 5839-1 recommends that systems are tested during normal working hours, occupants are normally using the building when doors are released during system tests. An alternative arrangement is to disable the interface during fire alarm tests to prevent the release mechanisms from actuating and to test the release mechanisms at another time. A central control might be used for this purpose if the tests were carried out at a suitable time.

*In the case of electronically secured doors and powered sliding doors, it is normal, particularly in the former case, to provide a suitably identified manual control adjacent to the doors to operate the release mechanisms if they have not already been released automatically. This would, however, be inappropriate in the case of certain doors in places of lawful detention (such as prisons and some mental health units). Moreover, in certain other very high security applications (e.g. doors separating airside from landside at airport terminals), the provision of such facilities to release electronically secured doors might be inappropriate (see commentary on Clause **6**); if, however, these controls are omitted in such applications, reliability in automatic actuation of release mechanisms on the occurrence of a fire signal needs to be high and Category C actuation is normally inappropriate.*

7.1 All release mechanisms to which this standard refers should be actuated throughout the building whenever a fire signal (but not a pre-alarm warning) is given at the fire alarm CIE, or whenever a manual evacuate control at the CIE is operated, other than in the following circumstances:

a) where a building is divided into alarm zones, release of self-closing fire doors might be restricted to the alarm zone in which fire alarm sounders are, or will be, operating; or

b) where a building has a staff alarm arrangement, electronically secured doors and powered sliding doors need not release or open until fire alarm sounders operate; and

   NOTE 1 Release of electronically secured doors before expiry of the staff alarm stage is not precluded.

c) where a building has a staff alarm arrangement, self-closing fire doors should normally close, unless a risk assessment determines that this is not necessary until fire alarm sounders operate; and

   NOTE 2 In applications in which Standard actuation (Category B) is suitable, release of self-closing fire doors prior to operation of fire alarm sounders might not be necessary.

d) in places of lawful detention (including prisons and mental health units),

electronically secured doors need not unlock provided there are adequate arrangements to ensure that safe egress of occupants in the event of fire is possible.

NOTE 3 For mental health units, see Department of Health publication HTM 05-03 Part B [10].

*NOTE 4 In certain other exceptional circumstances in which security considerations (including safety of the public) take precedence, a variation (see Clause **6**) from certain aspects of **7.1** might be acceptable, subject to a suitable risk assessment that confirms the adequacy of arrangements for safe egress of occupants in the event of fire, agreement of the interested parties (see Clause **5**) and recording of the variation in the commissioning certificate (see Clause **20**). Although outside the scope of this standard, arrangements, such as a central manual control, might be appropriate in these circumstances, and might also aid access by the fire and rescue service.*

7.2 A clearly labelled and identifiable manual control to actuate the relevant release mechanism (see Clause **11**), readily distinguishable from a fire alarm manual call point (e.g. by colour), should be provided in close proximity to:

a) electrically powered sliding doors on means of escape;

b) each electronically secured door on means of escape, other than in places of lawful detention (including prisons and mental health units) provided there are adequate arrangements and facilities to release the doors in the event of fire [e.g. by key-operated manual controls (see Clause **11**)].

NOTE 1 For mental health units, see Department of Health publication HTM 05-03 Part B [10].

*NOTE 2 In other exceptional circumstances in which security considerations (including safety of the public, e.g. from violent offenders) take precedence, a variation (see Clause **6**) might be acceptable. Manual controls may be omitted from certain doors subject to a suitable risk assessment that confirms the adequacy of arrangements for safe egress of occupants in the event of fire. Such a variation would, however, be inappropriate in the case of Indirect actuation (Category C).*

7.3 Operation of the control described in **7.2**, should cause interruption of the power supply to the door release mechanism, so causing the door(s) to open (see Clause **9** and Clause **11**).

7.4 Facilities may be provided for disablement of the means for actuation of release mechanisms, independently of disablement of any part of the fire detection and fire alarm system necessary for detecting fire and for giving warning in the event of fire. Disablement should be indicated by a light emitting indicator or alphanumeric display on, or in the vicinity of, the fire alarm CIE.

NOTE 1 The relevant control specified in BS EN 54-2 is deemed to meet this recommendation.

NOTE 2 An audible warning in addition to the light emitting indicator is desirable, but is not specified in BS EN 54-2.

7.5 A central control, by which several, or all, release mechanisms in the building can be actuated is not necessary for compliance with this standard, but may be provided for convenience of closing doors (e.g. at night in premises in which people sleep), or for testing actuation of release mechanisms. However, in the case of release mechanisms for self-closing fire doors, before provision of such a control, account should be taken of the risk to occupants from the sudden release of all doors in the building, and a suitable warning sign should be provided close to the control (see **11.1.2**).

In considering the risk to occupants, consideration should be given to the nature of the occupants, the momentum of the doors as they close and the proposed use of the control (e.g. whether or not it is intended for use when the building is occupied and escape routes are in use for normal circulation).

*NOTE 1 There might be a benefit in providing a local audible warning at door release units for self-closing fire doors, prior to release of the doors (see **11.1.2**).*

NOTE 2 Some release mechanisms have facilities that enable automatic release of doors at predetermined times of day and/or periodically for test purposes.

8 Mechanisms for unlocking and release of doors

*COMMENTARY ON CLAUSE **8***

The hardware and facilities that cause release of doors (the release mechanisms) are outside the scope of this part of BS 7273. However, since, in the event of fire, it is essential that doors are released, unlocked or opened with a high degree of reliability by these release mechanisms, it is appropriate for the release mechanisms to conform to the relevant product standard for such mechanisms. This will also provide reassurance that the release mechanism will perform correctly in the non-fire state. Failure to do so can indirectly affect fire safety; if, for example, an electrically powered hold-open device fails to hold a door open in the non-fire state, occupants might use unsatisfactory methods, such as a wedge, to hold the door open.

The design or configuration of the release mechanisms normally requires power to maintain the release mechanisms in the non-fire state, so that the release mechanisms fail-safe in the event of failure of their power supply. This is always essential in the case of release mechanisms for electronically secured doors and powered sliding doors on means of escape.

8.1 General

8.1.1 Any fire detection and fire alarm system on which a release mechanism depends for its correct actuation in the event of fire should conform to BS 5839-1 or BS 5839-6 as appropriate.

8.1.2 Fire alarm CIE on which a release mechanism depends for its correct actuation in the event of fire should conform to BS EN 54-2. The CIE provided should also have appropriate facilities to enable compliance with all the recommendations of this British Standard.

*NOTE 1 Existing systems conforming to earlier versions of the standards to which **8.1.1** and **8.1.2** refer, are likely to be acceptable, provided that any departures from the recommendations or requirements of the latest version are unlikely to impact on the reliability of the release mechanism to be actuated in the event of fire. For example, in the case of acoustically-actuated systems, circuits serving fire alarm sounders would need to be wired in fire-resisting cables, which was not necessary for compliance with BS 5839-1:1980; this is an example where compliance with the earlier version of the standard would impact on reliability.*

NOTE 2 BS EN 54-2 contains optional performance characteristics which are not necessarily provided in all CIE, even if third-party certified against BS EN 54-2.

8.2 Electrically held open fire doors

Electrically powered hold-open devices for self-closing fire doors should conform to BS 5839-3 or BS EN 1155. Where practicable, the design of the hold-open device should be such that failure of the power supply to the hold-open device results in the release of the doors.

Where the design of a release mechanism for an electrically held-open fire door is such that power is required to actuate the release mechanism, there should not be reliance on mains power for this purpose; power for actuation should be derived from a primary (non-rechargeable) or secondary (rechargeable) battery. There should then be an arrangement in the design of the product whereby the door is released before battery voltage reduces to a level that would be insufficient to release the door (see Table 1).

8.3 Electronically secured doors

The design or configuration of electronically operated locks or striking plates should be such that power is not required in order to unlock any door. If fitted to fire-resisting doors, the lock, latch and locking plate should meet the requirements for BS EN 12209:2003, Grade 1 in respect of fire resistance; hardware for the door should meet the requirements for BS EN 1527:2013, Grade 1 in respect of fire resistance.

NOTE 1 Requirements for electronically operated locks and striking plates are specified in BS EN 14846.

With Indirect actuation (Category C) of electronically secured doors, any associated access control system and its components should conform to BS EN 60839-11-1 and BS EN 50133-2-1.

NOTE 2 Requirements for electrically controlled hold-open systems, which are appropriate for indirect actuation of electrically held-open fire doors, are specified in BS EN 14637.

8.4 Powered sliding doors

Powered sliding doors on means of escape should be installed in accordance with BS EN 16005. The configuration of the release arrangements should be such that the doors open in the event of failure of the power supplies that operate the doors.

NOTE When the building is unoccupied this arrangement need not apply.

9 Interface design

*COMMENTARY ON CLAUSE **9***

There are many means by which a release mechanism can be interfaced with a fire detection and fire alarm system, so that it is actuated in the event of a fire signal. Common methods are set out in Annex C.

Fire alarm sounders might cease to operate during a fire. For the purpose of this standard, silencing of sounders (whether as a result of manual action or a fault) does not result in de-actuation of release mechanisms with the effect that doors return, or can readily be returned, to their non-fire state. Similarly, in arrangements that conform to this standard, actuation is not achieved by, for example, only a momentary signal or momentary break in the power supply to the release mechanisms, permitting doors to be returned to their non-fire state (e.g. in the case of electromagnetically held open self-closing fire doors, by persons pushing the doors against the re-energized magnet as they use the escape routes). Thus, for example, if actuation is achieved by a relay or removal of a signal, the relay remains in the fire state, or the signal will not be reinstated, until the fire detection and fire alarm system is reset.

*In some installations, release mechanisms have been actuated by a relay in a sounder circuit (other than that of a compatible input/output unit designed for the purpose). This practice is now deprecated. These considerations make the actuation of release mechanisms for electronically secured doors and powered sliding doors on means of escape by an acoustic signal from fire alarm sounders inappropriate. Since Critical actuation (Category A) is intended for use in situations, in which the correct operation of release mechanisms is vital, reliance on an acoustic signal for Critical actuation (Category A) is also inappropriate (see also **4.2.2**, Note 2). Where radio signalling is used to actuate release mechanisms, it is necessary to ensure that the failure of the radio transmitter during the course of a fire does not permit a release mechanism to return to the non-fire state [see Table 1g)]. This necessitates a continual monitoring signal between the transmitter and the release mechanisms.*

For Critical actuation (Category A), it is unlikely that a system that relies on operation of one or more relays to actuate a release mechanism conforms to Table 1c) unless the coil of at least one relay is normally energized; in the case of a normally de-energized coil, failure of both the normal and standby power supply to the fire detection and fire alarm system precludes changeover of the relay contacts in the event of fire.

Thus, in the example shown in Figure C.1a), if the coil of the common fire relay is used for actuation, and this coil is normally de-energized, it is likely to be necessary for the power supply to the release mechanism to be connected via a further relay that changes state in the event of failure of either or both the normal supply or the standby supply, and which has a normally energized coil; this might be the common fault relay at the fire alarm CIE [see Figure C.1b)]. Similar care needs to be taken where loop-powered relays are used as an interface (see Figure C.2).

The common fault relay can also be used to actuate release mechanisms in the event of various fault conditions (see Table 1). This arrangement will, however, result in actuation of release mechanisms in the event of faults that need not do so for compliance with this standard. This might result in unnecessary inconvenience or even increase, to a minor extent, the risk to occupants as a result of, for example, the sudden release of self-closing fire doors. Nevertheless, in many fire detection and fire alarm systems, this constitutes the only reasonably practicable means of ensuring that the release arrangements are suitably fail-safe for Critical actuation (Category A).

*In order to address the possibility of failure of the fire detection and fire alarm system to operate in the event of fire, there is also a need to provide an alternative, manual means of actuating certain release mechanisms (see Clause **7** and Clause **11**).*

9.1 General

9.1.1 Other than in the case of acoustically-actuated release mechanisms, once actuated on occurrence of a fire signal it should not be possible to de-actuate any release mechanism (i.e. return electrically held-open fire doors to the held-open state, electronically secure doors, or close powered sliding doors) until the fire detection and fire alarm system is reset; in particular, silencing of fire alarm sounders (whether by deliberate manual action or as a result of a fault) should not enable release mechanisms to be de-actuated.

9.1.2 The means by which a release mechanism is interfaced with the associated fire detection and fire alarm system should be such as to ensure reliably that the arrangements fail-safe in accordance with Clause **4** and Annex B for the appropriate category of actuation. Care should be taken, at both the design and commissioning stage (see Clause **20**), to ensure that release mechanisms are actuated in the event of the faults detailed in Clause **4** and Annex B for the relevant category of actuation. In the case of Critical actuation (Category A), particular care should be taken to ensure that release mechanisms are actuated in the event of simultaneous failure of both the normal and standby power supplies to the fire detection and fire alarm system.

NOTE Where it is reasonably practicable to limit the circumstances under which the release mechanisms will be actuated to only faults that could affect their actuation in the event of fire (e.g. by using standard facilities at the fire alarm CIE), this is desirable to prevent unnecessary actuation of release mechanisms.

9.1.3 In Indirect actuation (Category C), a short circuit or open circuit of any circuit between fire alarm CIE and other control equipment should result in actuation of any release mechanisms controlled by the other control equipment.

NOTE It is desirable that, where practicable, a short circuit or open circuit of any circuit between the other control equipment and a release mechanism also results in actuation of the release mechanism within a reasonable period of time. For reasons of security, this might not be practicable.

9.2 Electronically secured doors or powered sliding doors

Release mechanisms for electronically secured doors or powered sliding doors on means of escape should not be actuated by an acoustic signal.

9.3 Electrically held-open fire doors

9.3.1 Where Critical actuation (Category A) is deemed appropriate for release of electrically held-open fire doors, the release mechanisms should not depend on an acoustic signal for their actuation.

9.3.2 Where acoustic signals are used for Standard actuation (Category B) of a release mechanism for electrically held-open fire doors, the design of the release mechanism should be such that the doors cannot be inadvertently returned to the held-open state when fire alarm sounders are silenced (e.g. as people open the doors during evacuation).

NOTE A release mechanism in which a fire door is held open by the action of friction between a plunger and the floor surface meets this recommendation if a deliberate action, such as use of a foot-operated control, is necessary in order to reset the plunger after silencing of fire alarm sounders.

10 Monitoring, integrity and reliability of actuation arrangements

*COMMENTARY ON CLAUSE **10***

The nature of the critical signal path is such that the probability of faults that could prevent release mechanisms from being actuated in the event of fire is minimized. However, certain faults that can prevent actuation of release mechanisms can occur (e.g. failure of a relay). Work on the fire detection and fire alarm system, for the purpose of modification, repair or routine attention, could also prevent actuation of release mechanisms in the event of fire.

Nevertheless, measures are incorporated within this part of BS 7273 to limit the probability of impairments that would prevent actuation of release mechanisms. Generally this is achieved by the fail-safe nature of the critical signal path. This ensures that, if the wiring of the critical signal path is subject to mechanical damage, or to damage by fire, release mechanisms will be actuated. However, the wiring of the critical signal path is protected against mechanical damage to prevent unnecessary actuation of release mechanisms and multiple earth faults that might affect reliability of actuation arrangements. Normally, the actuation of release mechanisms will, nevertheless, provide a form of indication of damage. Compliance with the recommendations for maintenance arrangements ensures that faults are quickly identified and repaired. The probability that actuation of release mechanisms does not occur in the event of fire is, therefore, considered to be very low.

10.1 If a short circuit or open circuit of any circuit external to enclosures would prevent actuation of a release mechanism in the event of a fire signal, these

faults should result in an audible and visual indication at, or close to, the fire alarm CIE if the system design is not such that the faults themselves result in actuation of the release mechanism.

NOTE 1 In Critical actuation (Category A) and Standard actuation (Category B), in view of the fail-safe nature of the critical signal path, normally there is no need for additional monitoring to ensure indication of faults. Monitoring is not, however, an alternative to, or an appropriate substitute for, reliability or the fail-safe nature of the critical signal path. In Indirect actuation (Category C), it is appropriate for any circuits that do not fail-safe to be monitored.

*NOTE 2 Normally, the power supplies for release mechanisms also fail-safe, in that power supply failure results in actuation of the release mechanism. Where, in the case of release mechanisms for electrically held-open fire doors, this is not the case, it is appropriate for a fault signal to be given on, or close to, the fire alarm CIE (see **8.2**).*

10.2 Although monitoring of fail-safe circuits to indicate faults or actuation of release mechanisms is not necessary for compliance with this part of BS 7273, if such monitoring is provided, it should not affect the reliability of release mechanisms to be actuated in the event of a fire signal.

NOTE 1 Such monitoring might, however, be necessary to ensure that, for example, requirements for security of the building and its occupants are addressed. Such monitoring is not precluded by this standard provided it cannot affect the reliability of release mechanisms to be actuated in the event of fire.

NOTE 2 In the case of Indirect actuation (Category C), it might be acceptable for fault signals in non-fail-safe circuits to be given at other CIE that is under continuous surveillance by trained staff (e.g. access control system CIE in a security control room).

10.3 If communication between fire alarm CIE and a release mechanism is achieved via an interface device on the loop of an addressable fire detection and fire alarm system, communications with the interface device should be protected against a single cable fault (i.e. both short circuit and open circuit) anywhere on the addressable loop (e.g. by the provision of short circuit isolators on each side of the interface device).

10.4 In the case of acoustic actuation, failure of any single fire alarm sounder should not prevent the actuation of release mechanisms for self-closing fire doors at more than one location at which the doors protect stairways that form means of escape in the event of fire.

NOTE If a single fire alarm sounder in a building fails to operate, the evacuation of occupants in that part of the building might be delayed, putting these occupants at greater risk in the event of fire. If release mechanisms in the area of the sounder are acoustically actuated, the risk to the occupants might be further increased. The failure of the release mechanisms to actuate might also put other occupants of the building at greater risk. Routine testing of the fire detection and fire alarm system will not necessarily enable failure of a single fire alarm sounder to be identified. Accordingly, there might be circumstances in which it is not satisfactory for acoustic actuation of a release mechanisms to depend on the correct operation of any single fire alarm sounder.

11 Manual release controls

*COMMENTARY ON CLAUSE **11***

In the case of self-closing fire doors, local manual release controls are not necessary for compliance with this part of BS 7273, as the doors can normally be closed by manual action (e.g. pulling the door free from an electromagnet or retracting a plunger), and correct operation of the release mechanism can be tested by operating the fire detection and fire alarm system. However, a manual release control local to each door, is commonly provided and is often beneficial to users, e.g. for test purposes.

*This Clause applies only to manual release controls recommended in Clause **7**. The purpose of manual release controls is to provide a simple, reliable method of unlocking, or permanently opening, doors on means of escape that, if not released, would, respectively, prevent or impede escape in the event of fire. This control can then be used if release mechanisms are not actuated by operation of the fire detection and fire alarm system. Such a situation could arise because no manual call point or fire detector had yet been operated at the time in question; a fault on the fire detection and fire alarm systemcould also result in failure of release mechanisms to be actuated in the event of fire.*

11.1 Manual release controls for self-closing fire doors

11.1.1 Where a manual release control is provided and it is not incorporated in the release mechanism, its purpose should be clearly identified, and its location should be such that, to avoid risk to persons using the door, there is clear vision of the door when operating the control.

11.1.2 Unless, local to the doors, there is an audible warning of at least 10 s duration prior to release of self-closing fire doors, any central control provided to release self-closing fire doors that cannot all be viewed simultaneously from the operating location should be labelled "FIRE DOOR RELEASE CONTROL. Warning: Sudden release of fire doors can cause injury to people". The sign should incorporate the general hazard pictogram (comprising a triangle with an exclamation mark therein) specified in BS EN ISO 7010:2012. The label should be clear and in durable fade-resistant material.

NOTE The warning sign is sometimes described as a knock-down cautionary (or "KC") sign.

11.2 Manual release controls for electronically secured doors and powered sliding doors

11.2.1 To ensure that a manual release control can actuate release mechanisms, regardless of the state of the fire detection and fire alarm system, the manual release controls should be connected directly in series with the power supply to the release mechanism; the manual release control should not actuate a release mechanism by creating an input signal to other equipment that controls the release mechanism, although additional release controls, outside the scope of this part of BS 7273, may do so.

NOTE Operation of the release control then creates an open circuit in the power supply; for compliance with Table 1b) the release mechanism will then be actuated within 3 s.

11.2.2 Other than in places of lawful detention (see **7.2**), manual release controls should conform to the requirements specified in BS EN 54-11:2001 for Type A (single action) manual call points, other than **4.7.2.3** (colours) and **4.7.3.2** (symbols and lettering on front face). Manual release controls should be

predominantly green in colour and bear the words "EMERGENCY DOOR RELEASE". All manual release controls should be identical unless there is a special reason for differentiation.

NOTE 1 Type A indicates that the change to the operated condition is automatic (i.e. without the need for further manual action) when the frangible element is broken or displaced.

NOTE 2 In places of lawful detention, key-operated manual release controls might be appropriate.

11.2.3 The switch mechanism of every manual release control should be of the double pole type, and should be connected directly in series with the power supply (including any standby power supply) to the release mechanism.

11.2.4 The delay between operation of a manual release control and actuation of the associated release mechanism should not exceed 3 s.

11.2.5 Manual release controls should be fixed at a height of 1.2 m above finished floor level, at easily accessible, well-illuminated and conspicuous positions free from potential obstruction. They should be sited within approximately 2 m of the associated door(s), be mounted against a contrasting background to assist in easy recognition and, ideally, not be located immediately adjacent to a manual fire alarm call point. A lower mounting height is acceptable in circumstances where there is a high likelihood that persons using the control to escape might be wheelchair users. Care should be taken to ensure that the mounting location is such as to enable insertion of any tool used to carry out routine testing of the control.

NOTE The measurement is made between the finished floor level and the centre point of the frangible element.

11.2.6 Manual release controls should not be flush mounted. The front face of the control should be proud of the mounting surface by no less than 15 mm.

11.2.7 In premises in which emergency escape lighting is necessary, an emergency escape lighting luminaire should be sited within 2 m, measured horizontally, of each manual release control.

NOTE Recommendations and requirements for emergency escape lighting are given in BS 5266-1, BS EN 1838 and BS 5266-8.

11.2.8 Other than in premises in which only trained staff are likely to use the manual release control, adjacent to each control there should be a sign bearing the words "In emergency break glass to open door" in white letters, of at least 20 mm in height, on a green background. The sign should incorporate a suitable pictogram.

NOTE An example of a suitable sign is shown in Annex D.

12 Special considerations for the design of any associated fire detection and fire alarm system

12.1 All fire detection and fire alarm systems

*COMMENTARY ON **12.1***

Conformity of the fire detection and fire alarm system to BS 5839-1 minimizes the potential for false alarms. False alarms result in actuation of release mechanisms, and this might result in risk to occupants (e.g. by the release of electronically locked doors or the sudden release of electrically held-open fire doors). A number of interlinked smoke alarms is not an appropriate means for initiating a fire signal for the purpose of actuating release mechanisms, other than in the case of dwellings of limited size, for which the use of smoke alarms for giving warning of fire would meet the recommendations of BS 5839-6. For example, a system comprising interlinked smoke alarms is not normally able to give a warning of faults that could prevent actuation of release mechanisms in the event of fire.

All buildings in which one or more door release mechanism(s) are installed should be provided with a fire detection and fire alarm system that conforms to the recommendations given in BS 5839-1 for, at least, a Category M system. However, in the case of electrically held-open fire doors (see **12.2**), there should be, at least, some automatic fire detection.

NOTE 1 In the case of domestic premises, a fire detection and fire alarm system that conforms to BS 5839-6:2013, Table 1 may, alternatively, be provided.

NOTE 2 In some very small buildings there might not be a need for an electrical fire alarm system to give warning in case of fire (e.g. for compliance with fire safety legislation). In these cases it might not be necessary to install a Category M system to operate door release mechanisms; a small number of fire detectors might be all that is necessary.

12.2 Systems that actuate release mechanisms for electrically held-open fire doors

*COMMENTARY ON **12.2***

Any undue delay in actuating these release mechanisms permits smoke and fire to spread, so, for example, affecting any means of escape that the doors are designed to protect. Operation of manual call points is often delayed because occupants are initially unaware of a fire, or because of their reluctance to operate a manual call point. Accordingly, it is insufficient to rely purely on a Category M system to actuate release mechanisms.

In buildings in which a Category L1, L2 or L3 system is present, no special considerations for the design of the fire detection and fire alarm system is normally necessary; the selection, provision and siting of automatic fire detectors will already be sufficient.

Where a Category L4 system is present, smoke detectors are installed only in corridors and stairways that form the escape routes within the building; for compliance with BS 5839-1, there is no requirement for detectors to be installed within rooms opening onto escape routes or in open plan areas that do not form means of escape from other areas. It is, however, recognized that a Category L4 system might not always give a fire signal before there has been considerable smoke spread within an escape route.

Under experimental conditions [3)]*, it has been found that, in passing through a door crack, the hot oxygen-reduced gases from a flaming fire in a room can pyrolize the wood of the door and its frame to produce a dense, tar-laden smoke. This smoke, cooled in its passage through the crack, can be so heavy that, particularly with further cooling as it passes along an adjoining corridor, it fails to rise to the level of ceiling-mounted detectors; it can then spread, at lower levels, through a held-open fire door to smoke-log a corridor, or prevent use of a stairway, before operating detectors sited at normal spacing. At a later stage in the fire, heat conducted through the door will cause an upcurrent to carry the smoke to the detectors, but this might be after the escape routes are impassable.*

In this research, it was found that intumescent seals, fitted to the door of the room of fire origin (as, in practice, is necessary in the case of doors designed to provide 30 min fire resistance), prevented this effect, and smoke was held back sufficiently until heat conducted through the door carried smoke up to the ceiling. Under these circumstances, smoke detectors in the corridor, sited as would be the case in a Category L4 system, are likely to afford early enough detection of fire to be relied upon to actuate release mechanisms. In open plan areas, in which there are few, if any, barriers to the passage of smoke from a fire, smoke detectors sited at normal spacing throughout the area are also likely to be sufficient.

In other situations, if smoke detectors are sited only within an escape route, such as a corridor, spacing of detectors closer than recommended in BS 5839-1 is likely to be necessary. Care is also necessary to ensure that smoke issuing from the door of a room close to a held-open fire door cannot pass through the door in sufficient amounts prior to operating a smoke detector.

Where a Category L4 system is present, it follows from the above considerations that additional smoke detectors might be necessary within areas of escape routes in which there are fire doors that are normally held-open by door release mechanisms.

Where a Category L1, L2, L3, L4 system is not present, detectors will need to be installed specifically to initiate release of the doors; such a system is, by definition, a Category L5 system.

Since a Category L5 system is, effectively, "tailor made" for the particular circumstances, definitive recommendations for protection that would be applicable to every situation cannot be provided in this part of BS 7273; the same is true in relation to the potential additional smoke detectors required within a Category L4 system. In both cases, the design of the protection is to be based on an examination of the routes by which smoke could reach held-open fire doors, taking into account the principles set out in this standard. For example, in a multi- storey building with cross-corridor fire doors that are held open on, say, only one floor, there would be a need for smoke detectors within that corridor, but, for the purpose of this part of BS 7273, nowhere else in the building.

Examples of common situations, and the nature of the protection appropriate in each case, are shown in Figure 2 to Figure 4. For other situations, the same principles can be adopted.

12.2.1 The Category M system recommended in **12.1.1** should be combined with a Category L system.

NOTE In the case of dwellings, the appropriate Category LD system recommended in BS 5839-6:2013 may, alternatively, be provided.

[3)] The findings of this research were summarized in a BRE Research for Industry pamphlet [11], published in 1983 and now out of print.

12.2.2 In buildings with a Category L1, L2 or L3 system, the selection, provision and siting of automatic fire detectors are deemed to be satisfactory for compliance with this part of BS 7273. In all other cases, a Category M/L5 system conforming with **12.2.3** to **12.2.7** should be provided or in the case of a Category L4 system the provision and siting of automatic fire detectors should conform to **12.2.3** to **12.2.7** in those parts of the escape routes in which electrically held-open doors are provided.

12.2.3 Where an electrically powered hold-open device is fitted to a fire door that subdivides a corridor, a Category L4 or M/L5 system should incorporate smoke detectors within the sections of corridor on each side of the fire door as illustrated in Figure 2.

NOTE The provision of detectors in any voids above or below the corridor is normally unnecessary in these applications for the purpose of compliance with this standard.

12.2.4 The siting and spacing of smoke detectors in a Category L4 and M/L5 systems should conform to BS 5839-1:2013, **22.3**, **22.5**, **22.7** and **22.9**, except that, where a held-open door subdivides a corridor, or separates a corridor from a stairway, smoke detectors in the corridor should be located no further than 4 m from any point within the section of corridor, unless all doors between rooms (other than toilets, shower rooms and similar rooms of low fire risk) and the corridor are at least FD30S doors. Where the doors in question are not at least FD30S doors, the spacing between detectors should not exceed 8 m (see Figure 2).

12.2.5 In addition, where an electrically powered hold-open device is fitted to a fire door between a corridor and a stairway, a Category L4 or M/L5 system should conform to the following recommendations as illustrated in Figure 3.

a) Smoke detectors should be provided in the section of corridor that forms the route to the stairway.

b) At least one of the smoke detectors recommended in **12.2.5**a) should be located within 1.5 m horizontally of the door opening (see Note 2).

c) A smoke detector should be located on the ceiling of the adjacent landing within the stairway enclosure.

*NOTE 1 For the purpose of **12.2.3** and **12.2.4**, a section of corridor is deemed to end at a wall, a door to a stairway, or at a self-closing door that is not provided with any form of hold-open device (see Figure 2).*

*NOTE 2 If smoke detectors in the corridor are located such that there is no doorway to a room, and no permanent fire hazard, between the stairway door and the nearest smoke detector, compliance with this recommendation is likely to be unnecessary, provided that the siting of the smoke detector(s) in the corridor conforms to **12.2.4** (see Figure 3b).*

12.2.6 In addition, where an electrically powered hold-open device is fitted to a fire door between a corridor or stairway and an adjacent room or open plan area, a Category L4 or M/L5 system, in addition to compliance with the relevant recommendations of BS 5839-1, should incorporate smoke detectors in accordance with the following recommendations (see Figure 4).

a) Where the door of a room opens into a corridor, at least one smoke detector should be installed within the corridor, no further than 7.5 m horizontally from the centre line of the door opening.

b) Where the door opens onto a stairway, a smoke detector should be located on the ceiling of the landing within the stairway enclosure.

c) A smoke detector should be located in the adjacent room or open plan area within 1.5 m of the door.

d) Smoke detectors should be sited such that no point in the adjacent room or open plan area is more than 7.5 m from the nearest smoke detector.

NOTE 1 In some cases, where installation of smoke detectors in the adjacent room or area would be impracticable as a result of potential for false alarms (e.g. if the room is a kitchen), consideration might, exceptionally, be given to the installation of a heat detector(s) in the room or area, sited such that no point in the room or area is further than 5.3 m from the nearest heat detector. Care would, however, be necessary to ensure that, in view of the much lower sensitivity of heat detectors, smoke would be unlikely to threaten a critical escape route before actuation of the door release mechanism. In such cases, the use of a door release mechanism might be precluded.

*NOTE 2 For the purpose of measuring the dimensions specified in **12.2.6**c) and **12.2.6**d), an inner room(s) of limited size may be ignored, and protection of the inner room(s) will be unnecessary (see Figure 4).*

NOTE 3 A FD30S door is one that affords a fire resistance of 30 min in terms of integrity when tested in accordance with BS 476-22, and is fitted with smoke seals.

12.2.7 For situations other than those described in **12.2.3** to **12.2.6**, the principles described in these recommendations, and shown in Figure 2 to Figure 4, should be adopted.

Figure 2 **Protection in corridors subdivided by electrically held open cross corridor fire doors**

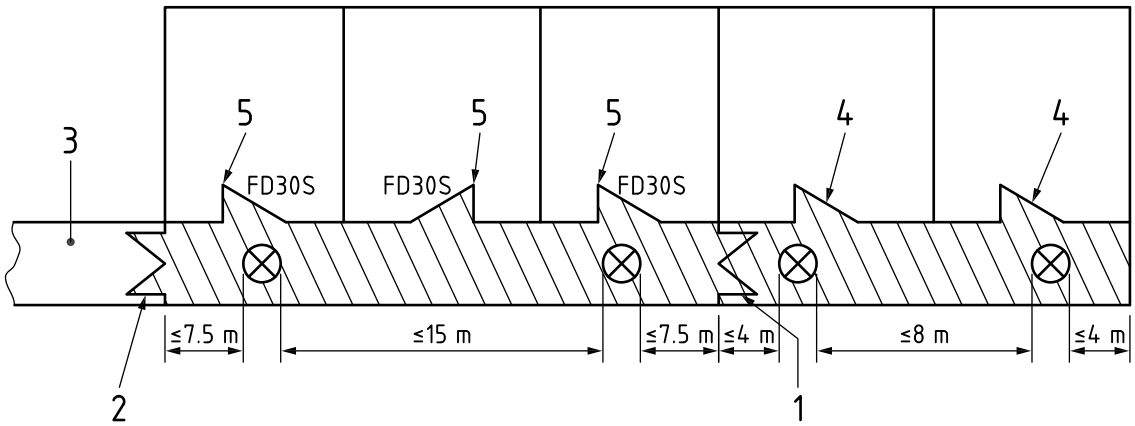

Key

1	Door held open
2	Door not held open
3	Area unprotected
4	Non-fire resisting door or fire-resisting doors not fitted with intumescent strips and smoke seals
5	Fire resisting door fitted with intumescent strips and smoke seals
	Area protected by smoke detectors

Figure 3 **Protection where a fire door between a corridor and a stairway is electrically held open**

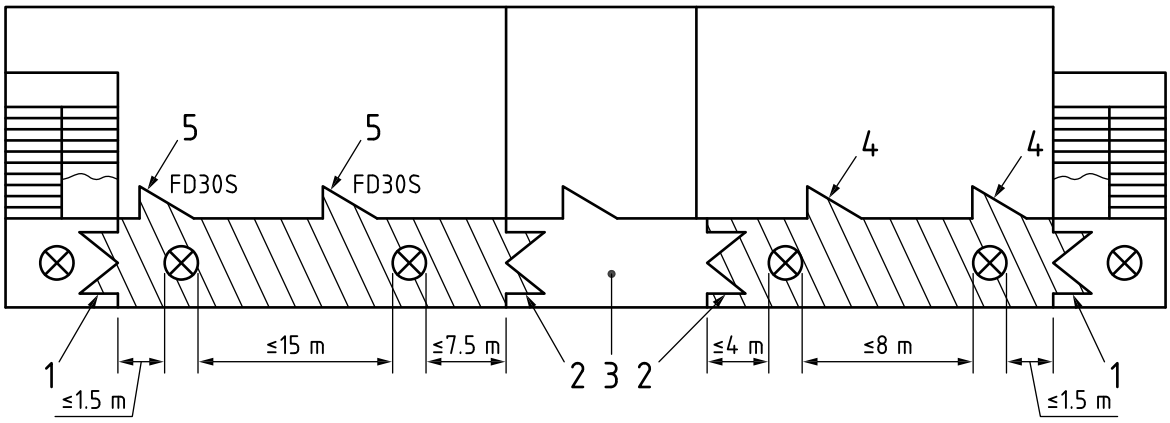

a) Where there is a door between the nearest detector to the staircase and the staircase door

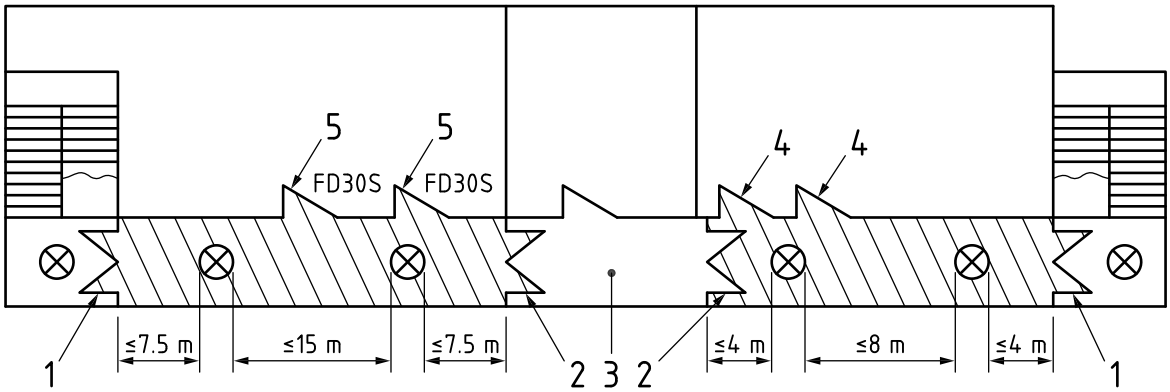

b) Where there is no door between the nearest detector to the staircase and the staircase door

Key

1	Door held open
2	Door not held open
3	Area unprotected
4	Non-fire resisting door or fire-resisting doors not fitted with intumescent strips and smoke seals
5	Fire resisting door fitted with intumescent strips and smoke seals
	Area protected by smoke detectors

Figure 4 **Protection where a fire door between a room of limited size and a corridor or a stairway is electrically held-open**

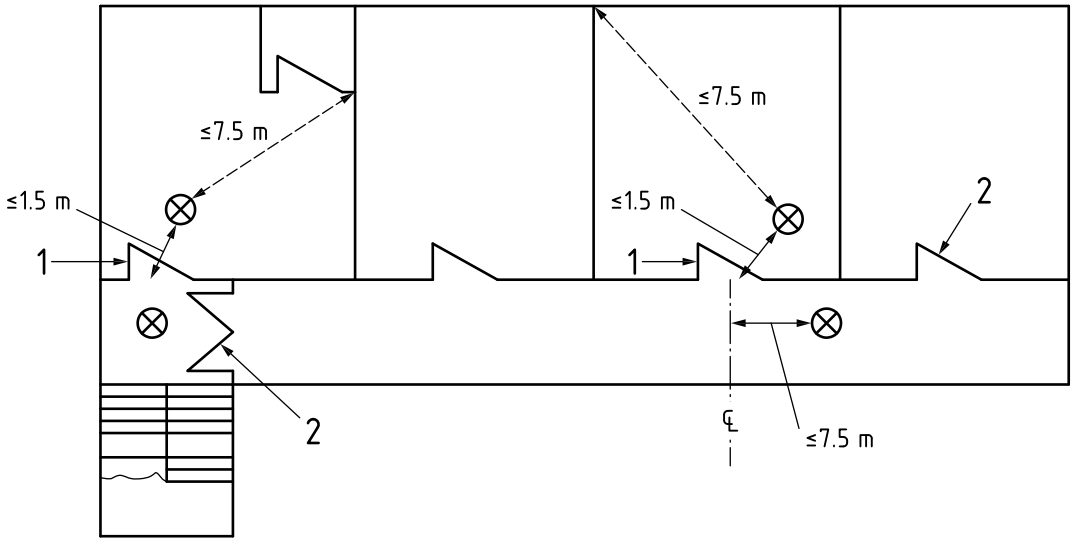

Key

1 Door held open

2 Door not held open

12.3 Systems that actuate release mechanisms for electrically secured doors and powered sliding doors on means of escape

*COMMENTARY ON **12.3***

*In the case of these systems, the doors in question are not used until people begin to evacuate the building. At that stage, normally fire alarm sounders are operating. If this is not the case, the doors can still be released by operation of a manual release control (see Clause **11**).*

The category of fire detection and fire alarm system that is appropriate for the building is, therefore, determined primarily by considerations in respect of giving warning to occupants in the event of fire, and there is normally no need to modify its design to facilitate actuation of door release mechanisms, except in any minor respect necessary for compliance with other clauses of this standard. Often, enforcing authorities/bodies do not permit use of electronically secured doors or powered sliding doors on means of escape in certain premises in which the doors are used by a substantial number of members of the public (see Annex B), or in certain licensed premises. Reluctance to accept securing of doors or powered operation of doors might be based on lack of familiarity with the building, and with the use of manual release controls, by members of the public, in conjunction with the delay in operation of manual call points that has been known to occur in the event of a fire in buildings of this type.

The acceptability of electronically secured doors or powered sliding doors in these cases is generally based on a risk assessment. The presence of relatively extensive automatic fire detection, particularly in the case of a Category L1 system or similar, could be taken into account in such a risk assessment, and might, in some cases, enable acceptance of electronically secured doors or powered sliding doors in circumstances that would otherwise preclude this.

12.3.1 The category of fire detection and fire alarm system should be determined primarily by the need to give warning to occupants in the event of fire.

12.3.2 Where a Category L or P system is provided, a fire signal from an automatic fire detector should result in actuation of release mechanisms, with the exception of during any staff alarm stage in which fire alarm sounders are not operated [see **7.1**b)], or in places of lawful detention [see **7.1**d)].

13 Power supplies

*COMMENTARY ON CLAUSE **13***

All release mechanisms depend on electric power for their correct operation, either or both in the non-fire state or for actuation. The fire detection and fire alarm system, on which the release mechanisms depend, needs a power supply for its correct operation, although, in the case of Critical actuation (Category A), total failure of the power supply results in a fail-safe situation, whereby all release mechanisms are actuated.

13.1 No power should be drawn from the fire detection and fire alarm system to maintain release mechanisms in the non-fire state, other than power for indicators and interface devices.

NOTE It would, however, be acceptable to draw power for indicators and interface devices (e.g. relays) associated with the release mechanisms, provided that, in the calculation of standby battery capacity, account is taken of the power consumption of these devices. In determining the maximum alarm load, account needs to be taken of any current supplied to release mechanisms and associated equipment during a fire alarm condition.

13.2 Generally, release mechanisms fail-safe on failure of the power supply to the release mechanisms, or before total failure of the power supply occurs. In the case of electronically secured doors, release mechanisms should always fail-safe on total power failure; thus, they should be of a type that requires power in order that the door remains secured. A standby supply for these release mechanisms may be provided for reasons of security, but it should be ensured that the manual release controls recommended in this standard interrupt the standby supply, as well as the normal supply, to the release mechanisms (see Clause **11**).

13.3 Any batteries used as the normal supply for release mechanisms should be capable of providing power to operate the release mechanism correctly for at least 12 months, taking into account a weekly test of at least 60 s duration plus false alarms in the building, of at least 10 min duration, at the rate of one false alarm per 50 automatic fire detectors per annum (as specified in BS 5839-1).

NOTE Where release mechanisms for held-open fire doors depend on batteries for their correct operation, battery life is important; although on, or before, loss of power the release mechanisms will be actuated, too frequent, random release of doors might result in unacceptable means of holding the doors open (e.g. wedges or cabin hooks).

13.4 With Indirect actuation (Category C), unless release mechanisms are actuated in the event of total failure of power to any non-fire alarm control equipment for the release mechanisms, including simultaneous failure of both the normal and standby power supplies (where provided), the power supply unit for the non-fire alarm control equipment should be provided with standby batteries capable of supporting the operation of the system for a minimum of 4 hours.

NOTE If release mechanisms are not actuated automatically after the standby period has elapsed, it is important that suitable action is taken by premises management to ensure the safety of occupants (e.g. evacuation of the building, or permanent unlocking of the doors until power is restored).

13.5 With Indirect actuation (Category C), the power supplies for non-fire alarm control equipment should be reliable. It is preferable that the release mechanisms are actuated on total failure of the power supply to the equipment, but such an arrangement is clearly detrimental to security. If such a fail-safe arrangement cannot be ensured, reliability of the power supply, and the duration of any standby supply, should be commensurate with that appropriate for a fire detection and fire alarm system.

14 Cables, wiring and other interconnections

*COMMENTARY ON CLAUSE **14***

*The critical signal path normally comprises one or more cables. However other forms of interconnection, such as acoustic coupling (see Clause **15**) or radio communication (see Clause **16**), may be used.*

14.1 In order to prevent inconvenience, maintain accessibility, or to avoid risk to occupants from unnecessary actuation of electrically held-open fire doors (see Annex A), the cables should be sufficiently robust to resist mechanical damage, or should have additional mechanical protection against damage.

NOTE The critical signal path normally fails safe. Therefore, an open circuit or a short circuit on any wiring of the critical signal path will cause actuation of the release mechanisms. Accordingly, no special recommendations apply to these cables; for example, they need not be fire-resisting, unless, exceptionally, the circuit does not fail-safe.

14.2 The electrical characteristics of all cables of the critical signal path, such as voltage drop, current carrying capacity and impedance, should be suitable for the circuit in question.

14.3 The conductors of all cables of the critical signal path should have a cross-sectional area of at least 1 mm^2.

14.4 Mineral insulated copper sheathed cables conforming to BS EN 60702-1 and steel wire armoured cables conforming to BS 6724 or BS 7846 may be used throughout all parts of the critical signal path without additional mechanical protection. Other cables used for the critical signal path should be given additional mechanical protection. This protection may be provided by laying cable on tray, protecting it by burying in the structure of the building, or by installation in conduit, ducting or trunking. Where particularly arduous conditions might be experienced (such as impact by forklift trucks or goods trolleys), mechanical protection should be provided by burying the cable in the structure of the building or installation in metal conduit or trunking.

14.5 Where conduit is used to meet the recommendations of **14.4**, the conduit should conform to the relevant part of BS EN 61386. Any non-metallic trunking used in the system should conform to BS 4678-4.

14.6 If any circuits of the critical signal path do not fail-safe, the cables, and their method of installation, should conform to BS 5839-1:2013, **26.2**.

NOTE Non-fail-safe circuits within the critical signal path are undesirable.

14.7 With Indirect actuation (Category C), if an open circuit or short circuit of wiring between non-fire control equipment and any release mechanism would not result in actuation of the release mechanism, the cables should conform to **14.4**.

NOTE In Indirect (Category C) systems, the wiring between non-fire alarm control equipment and release mechanisms is outside the scope of this part of BS 7273. However, an open circuit or short circuit of this wiring might not cause actuation of release mechanisms. Accordingly, particularly in the case of electronically secured doors and powered sliding doors, this wiring will normally need additional mechanical protection.

15 Acoustically-actuated systems

*COMMENTARY ON CLAUSE **15***

*Some of the recommendations given in this part of BS 7273, applicable to a totally wired critical signal path, are unsuitable for, or cannot be applied to, acoustically-actuated systems, in which the release mechanisms for electrically held-open fire doors are actuated by the sound emitted from the fire alarm sounders in the building. Such recommendations include, in particular, those relating to power supplies and many of those applicable to Critical actuation (Category A) systems. Additional recommendations apply to acoustically-actuated systems in order to address the integrity and performance of the acoustic coupling between fire alarm sounders and the door release mechanisms. It is not appropriate to actuate release mechanisms for electronically secured doors or powered sliding doors acoustically (see Clause **8**).*

In practice, no system can have total reliability, but one of the objectives of good system design is to reduce the probability of the system failing to operate in the event of fire. Great care needs to be taken when assessing a building and selecting the technology to use, as acoustically-actuated systems are not necessarily suitable for every application in every building. Users are advised to consider whether acoustic actuation is appropriate before installing acoustically actuated mechanisms. See Annex E for the advantages and disadvantages of acoustically-actuated release mechanisms.

15.1 An acoustically-actuated release mechanism should not be installed in a location at which the release mechanism is likely to be actuated by ambient noise levels when the building is in normal operation.

15.2 Acoustic actuation of release mechanisms should conform to Table 1b), **8.2**, **9.3.2**, **10.4**, and **13.3**.

15.3 Circuits serving fire alarm sounders on which acoustically-actuated release mechanisms depend for their correct operation should be wired in cables that meet the recommendations of BS 5839-1:2013, **26.2**d).

15.4 During installation and commissioning (see Clause **20**), steps should be taken to ensure that the sound pressure level produced by the fire alarm sounders at each release mechanism in turn is adequate to actuate each release mechanism when the associated door is held-open but all other doors in the building (regardless of whether these doors are self-closing and/or fire-resisting and/or normally held-open) are fully closed.

16 Radio-actuated systems

*COMMENTARY ON CLAUSE **16***

Some of the recommendations given in this part of BS 7273, applicable to a totally wired critical signal path, are unsuitable for, or cannot be applied to, radio-actuated systems, in which one or more release mechanism(s) are actuated by a radio signal or discontinuation of a radio signal. Such recommendations include, in particular, those relating to power supplies. Additional recommendations apply to radio-actuated systems in order to address the integrity and performance of the radio communications link between the fire detection and fire alarm system and the door release mechanisms.

In practice, no system can have total reliability, but one of the objectives of good system design is to reduce the probability of the system failing to operate in the event of fire. Great care needs to be taken when assessing a building and selecting the technology to use, as radio-actuated systems are not necessarily suitable for every application in every building. Users are advised to consider whether radio actuation is appropriate before installing radio-actuated mechanisms. See Annex F for the advantages and disadvantages of radio-actuated release mechanisms.

16.1 Radio actuation of release mechanisms should conform to Table 1b) and Table 1g), or **4.2.2** (as appropriate to the category of actuation), **8.2**, **13.3** and **17.2**.

16.2 During installation and commissioning (see Clause **20**), steps should be taken to ensure that the radio signal level at each release mechanism in turn is adequate to actuate each release mechanism when the associated door is held open but all other doors in the building (regardless of whether these doors are self-closing and/or fire resisting and/or normally held-open) are fully closed.

16.3 Where one or more antennae external to components are used, the cable to each antenna should conform to **14.4**.

16.4 Where unnecessary release of self-closing fire doors is considered to create undue risk to occupants (e.g. in a building with a significant number of elderly or frail occupants), radio transmission equipment should have a standby power supply (e.g. a secondary battery) with sufficient capacity to operate the radio transmission equipment for 6 h in the event of failure of the normal supply, unless, local to the doors, there is an audible warning of at least 10 s duration prior to release of the doors.

16.5 Where a combination of radio and acoustic actuation is used, the system should conform to both Clause **15** and Clause **16**, but such a system should not be used for actuation of release mechanisms for electronically secured doors or powered sliding doors (see Clause **9** and Clause **15**).

17 Electromagnetic compatibility

*COMMENTARY ON CLAUSE **17***

Any electrical installation can be susceptible to, or cause, electromagnetic interference if not designed and installed properly. Mobile devices, two-way radios and other electrical circuits in close proximity can all affect any part of a hardwired or radio-actuated system. The effect in extreme cases could be that release mechanisms are actuated, or even that they fail to actuate in the event of fire. However, simple attention to good installation practices is likely to preclude such effects in most hardwired systems.

In the case of radio-actuated systems, interference from other sources can be reduced by proper receiver design (e.g. narrow receiver bandwidth) and suitable encoding of transmissions. It is particularly important in the case of systems that actuate release mechanisms by discontinuation of radio transmission that receivers can discriminate between signals from the associated transmitter and other interfering signals, which might otherwise prevent release mechanisms from being actuated when the signal from the transmitter is discontinued.

With Indirect actuation (Category C), it is common, particularly in large buildings with many electronically locked doors, for data transmission to be used to communicate between central control equipment and outstations that then control the electronic locks. It is important, in these cases, to ensure that any data transmission on which actuation of release mechanisms depends is sufficiently immune to interference that could prevent actuation of release mechanisms.

Fire detection and fire alarm systems can also be susceptible to electromagnetic interference. Compliance with BS 5839-1, and use of CIE conforming to BS EN 54-2, minimizes the possibility of system malfunction as a result of such interference. Attention is drawn to the potential of interconnection of release mechanisms, and associated equipment, with the fire detection and fire alarm system to be detrimental to the immunity of the latter system to electromagnetic interference.

17.1 There should be adherence to any recommendations of the manufacturer of the release mechanisms and any associated equipment in respect of electromagnetic compatibility.

NOTE Attention is drawn to the Electromagnetic Compatibility Regulations 2006 [12], which implement the EMC Directive 204-108-EC [13].

17.2 In radio actuated systems, radio transmitters and receivers should meet the spectrum utilisation requirements specified in ETSI EN 300 220-1 and ETSI EN 300 220-2. Radio receivers should meet the performance requirements for, as a minimum, a Category 2 classification. The format and coding of transmissions should be such as to minimize potential for spurious actuation, or for prevention of actuation, of release mechanisms as a result of interference by other radio transmissions.

NOTE Attention is drawn to the Radio and Telecommunications Terminal Equipment (R&TTE) Directive [14].

17.3 In any system using data transmission within the critical signal path, or between the critical signal path and any release mechanism, design and installation practices should be such as to minimize potential for corruption of data as a result of electromagnetic interference, particularly where this could result in failure of release mechanisms to be actuated in the event of a fire signal.

17.4 No cables carrying power or signals to release mechanisms or associated equipment should be introduced into the CIE of the fire detection and fire alarm system unless the manufacturer of the latter equipment confirms that this will neither negate compliance of the CIE with the requirements of the Electromagnetic Compatibility Regulations 2006, nor otherwise detrimentally affect the performance of the fire detection and fire alarm system as a result of electromagnetic interference.

18 Electrical safety

*COMMENTARY ON CLAUSE **18***

Electrical circuits associated with the actuation of release mechanisms are a form of electrical installation, regardless of whether the circuits operate at extra low voltage (ELV) or low voltage (LV).

Mains supplied equipment normally has a circuit protective conductor (CPC) to provide a protective earth. Some electrical equipment, such as double insulated equipment, does not have a protective earth because of inherent safety built into the design of the devices, but, in general, LV and ELV circuits within the scope of this part of BS 7273 will need a CPC.

Introduction of power supplies from other systems into fire alarm CIE can also present a hazard during maintenance, particularly in the case of LV supplies and ELV supplies that do not incorporate a safety isolating transformer. It is preferable if circuits of other equipment terminate externally to the enclosure of the fire alarm CIE (e.g. in a junction box immediately adjacent to the enclosure). If circuits other than those of the fire detection and fire alarm system enter the fire alarm CIE, they need to be clearly identified within the CIE and protected against exposure to touch when the door of the CIE is opened.

18.1 All electrical installation work should be carried out in accordance with BS 7671. Particular care should be taken regarding requirements in respect of earthing.

18.2 LV circuits and ELV circuits should be segregated in accordance with BS 5839-1:2013, **29.2**.

18.3 Means should be provided for double pole isolation of all LV circuits within the scope of this part of BS 7273; the isolation facilities should be suitably sited, in the vicinity of the equipment served, for use by maintenance technicians without the need for access to remote parts of the building. It should be possible to lock the facilities in both the normal and isolated positions to prevent unauthorized use. There should be a clear means of indication, at the isolation facility, as to the state of the circuit (isolated or live). The method of indication should not comprise a fallible component, such as an illuminated indicator.

18.4 Where practicable, circuits serving release mechanisms should not enter fire alarm CIE (see also **17.4**). Where this is considered impracticable, wiring of these circuits within the CIE should be easily identifiable and live parts should be protected from exposure to touch when the door of the enclosure is opened (e.g. by use of an insulated cover).

19 Door signage

*COMMENTARY ON CLAUSE **19***

In some circumstances, the presence of release mechanisms give rise to the need for suitable warning signs or signs that give information to enable people to escape safely.

Self-closing fire doors that are normally held-open by release mechanisms usually have signs on the doors themselves to warn people not to place anything in the doorways that might impede the automatic closure of the doors in the event of fire. The sign also acts as a warning to people that the door might be released without warning.

19.1 A sign bearing the words “Automatic fire door keep clear” should be mounted at approximately eye level on both sides of all self-closing fire doors that are normally held-open by release mechanisms. The sign should conform to BS EN ISO 7010.

19.2 Where manual release controls are provided for electronically locked doors and powered sliding doors, the recommendations of **11.2.8** in respect of the need for, and nature of, appropriate signs should be followed.

20 Commissioning

*COMMENTARY ON CLAUSE **20***

The process of commissioning involves thorough testing of the installed release mechanisms to ensure that, in the event of a fire signal, they operate correctly in accordance with this part of BS 7273 and any design or purchase specification. The organization responsible for commissioning the release mechanisms might, or might not, be the same organization that installed or maintains the fire detection and fire alarm system. In a complex building, a further organization might be responsible for other associated systems or equipment, such as central access control processing equipment.

In many cases, such as the installation of a small number of acoustically-actuated release mechanisms for electrically held-open doors, the commissioning process is very simple; in other cases, such as the installation of a complex access control system, extensive work might be involved. However, in all cases, great care needs to be taken, as commissioning is the final opportunity to identify potential for incorrect functioning of release mechanisms before bringing the release mechanisms into operation. Although the technology, and hence any wiring arrangement, etc., might not be complicated or require special skills in its installation, simple errors might place persons at serious risk in the event of fire.

The risk to which people might be exposed in the event of incorrect operation of release mechanisms is not hypothetical. Incidents have occurred in which, for example, an electronically locked door has failed to release (even on operation of a local manual release control) when the fire detection and fire alarm system was operated, purely as the result of a simple wiring error. In at least one fatal fire, the victim could not be reached quickly by colleagues, or by the fire and rescue service, as, it is thought, cable linking a release mechanism to an access control computer had been damaged by the fire. Injury (in at least one case fatal) has also been known to result from release of electrically held-open fire doors in a non-fire situation (e.g. by use of a central control to close the doors at night, or during routine testing of the fire detection and fire alarm system).

It is not, in general, the responsibility of the commissioning organization (which is often the same organization as the installer) to confirm that the provision of a release mechanism in any particular situation is acceptable under fire safety legislation. In general, the responsibility of the commissioning organization is to verify that the equipment installed operates correctly in the manner designed, that installation workmanship is generally of adequate quality and that there is compliance with this part of BS 7273. Commissioning is often the first opportunity to confirm this (e.g. by confirming that, where acoustic actuation is used, the sound pressure level of the audible fire alarm signal in the building is sufficient at the location of each release mechanism).

The recommendations in this clause are applicable both to new systems, and to modifications and additions to systems.

20.1 Release mechanisms and associated equipment should be commissioned by a competent person, who has access to the designed cause and effect and any requirements of the purchaser (e.g. a purchase specification), along with other relevant documentation or drawings, including the recommendations of the manufacturer in respect of installation and commissioning. The level of competence should be appropriate for the complexity of the equipment and its interconnection with the fire detection and fire alarm system.

20.2 Any person responsible for commissioning a release mechanism (including, in simple cases, any representative of the purchaser responsible for the commissioning process) should either possess, at least, a basic knowledge and understanding of this part of BS 7273, or should be provided with sufficient written guidance to enable a person of that competence to satisfy all recommendations of this clause.

20.3 There should be adequate co-operation and co-ordination between all parties involved, and the responsibility of each party should be defined prior to installing release mechanisms.

20.4 At commissioning, all equipment should be inspected and should be tested for correct operation to ensure that it operates satisfactorily in both the non-fire and fire states, and that, in particular:

a) all release mechanisms are correctly actuated in the event of a fire signal (where appropriate after any delay permitted by this part of BS 7273) and when the evacuate control at the control equipment of the fire detection and fire alarm system is operated, including in the following circumstances:

1) where there could be different responses to different devices, such as manual call points or detectors (whether intentionally or inadvertently as a result, for example, of incorrect programming), correct response to each type of device should be confirmed;

2) where there is a complex cause and effect in respect of release mechanisms (e.g. in a building divided into a number of alarm zones), care should be taken to ensure that, on operation of a manual call point or fire detector in each alarm zone in turn, all relevant release mechanisms (e.g. those in the particular alarm zone) are actuated, while those not required by the specification to actuate (e.g. those in other alarm zones) do not do so;

3) in the case of acoustically- and radio-actuated release mechanisms, it should be confirmed that, when each release mechanism is tested in turn, the associated door closes correctly when all other doors in the building (whether self-closing and/or fire-resisting and/or normally held-open) are fully closed;

b) all labels and notices recommended in this part of BS 7273 and/or required by the product specification are in place and clearly legible;

c) all manual release controls (whether or not required for compliance with the recommendations of this standard) correctly actuate the relevant release mechanisms. To ensure that manual release controls have been correctly wired, each control should be operated in turn; the correct response of the release mechanism should be confirmed when, firstly, the fire alarm CIE is in the normal (non-fire) state, and then when a fire signal occurs in the building (or in the alarm zone of the building);

WARNING. Take care when actuating release mechanisms to ensure that undue risk to occupants of the building is avoided; sudden release of self-closing fire doors can cause injury, while release of electronically secured doors might compromise security.

d) each release mechanism fails safe (is actuated) in each of the circumstances defined in **4.2.1** or **4.2.2** (as appropriate);

e) siting of manual release controls, and the nature of the controls provided, conforms to, at least, the recommendations given in Clause **11**;

f) any local audible warning of impending release of self-closing fire doors operates correctly;

g) where appropriate, emergency escape lighting is provided in the vicinity of manual release controls for electronically secured doors and powered sliding doors (see **11.2.7**);

h) the fire detection and fire alarm system conforms to Clause **12**, particularly, in the case of electrically held-open fire doors, in respect of provision and siting of automatic fire detectors;

i) arrangements for monitoring and system integrity conform to Clause **10**; and

j) power supplies conform to Clause **13**.

20.5 On completion of commissioning, a certificate signed by a competent person should be issued. This certificate may be the same as the certificate for the fire detection and fire alarm systems provided that the latter refers to the actuation of door release mechanisms and to this part of BS 7273.

NOTE 1 A model certificate is shown in Annex G.

NOTE 2 Even in simple cases, where commissioning might be undertaken by the user, completion of a commissioning certificate is appropriate, as evidence that the release mechanisms have been properly commissioned; such evidence might be requested by an enforcing authority/body.

20.6 On completion of commissioning, it should be ensured that the user has sufficient information regarding the operation of the release mechanisms, and any other equipment installed, to enable them to be maintained in accordance with Clause **21**.

21 Maintenance

21.1 Routine testing

21.1.1 Although the critical signal path normally fails safe, so that most faults result in actuation of the release mechanisms, weekly testing should be carried out as detailed in **21.1.2** to ensure that there has not been any failure of a component, such as a relay (e.g. the common fire relay at the fire alarm CIE), that could prevent actuation of release mechanisms.

NOTE Routine testing also confirms that each release mechanism is operating correctly and that, for example, distortion of doors does not prevent the doors from opening or closing as required.

21.1.2 Every week, a fire alarm signal(s) should be used to cause actuation of all release mechanisms. It should be confirmed that each release mechanism operates correctly and that the doors close properly, unlock or revert to the fully open position, as appropriate. This test should normally be carried out at approximately the same time each week and be of sufficient duration to ensure proper actuation.

*NOTE 1 Since BS 5839-1 recommends that the fire detection and fire alarm system is tested every week, that test can be used to meet this recommendation. However, since the test recommended in BS 5839-1 is carried out during normal working hours, there might, in the case of electronically held-open fire doors, be a risk of injury to occupants. There are several safe methods that can be developed to carry out this test. For example, prior warning of imminent release of doors could be given to occupants by means of a public address system, a voice alarm system or a local audible warning at each door. Alternatively, the interface between the fire detection and fire alarm system and the release mechanisms might be disabled at the time of the weekly fire alarm test (see **7.4**); a further test could then be carried out at a time of low occupancy of the building to test the operation of release mechanisms.*

NOTE 2 To avoid complacency on the part of occupants when they hear audible fire signals, it is undesirable that any individual occupant hears the evacuation signal on more than one occasion per week, and the duration for which fire alarm sounders operate during any test specifically carried out to test the operation of release mechanisms should be kept to the minimum practicable.

NOTE 3 Use of a central control that actuates a number of release mechanisms will not necessarily meet the recommendation, as this will not necessarily test the entire critical signal path, unless a further test is carried out (e.g. to operate the common fire relay).

21.1.3 Where not all release mechanisms in the building are actuated when the weekly test is carried out, a suitable test regime should be developed to ensure that, at least, all release mechanisms (but not necessarily the associated circuits) are tested every week. If, for example, in a building with multiple alarm zones, a number of different relays are provided to each cause actuation of release devices in only one or more alarm zones, the test regime should ensure that a different relay is operated each week, so that all relays are tested in rotation; all

individual release mechanisms could then be tested every week (e.g. by operation of a manual release control on each release mechanism).

21.2 Inspection and servicing

*COMMENTARY ON **21.2***

The critical signal path, any equipment on which release mechanisms depend for their actuation and the release mechanisms themselves are periodically inspected and serviced so that unrevealed faults are identified, preventive measures can be taken to ensure the continued reliability of actuation, problems of unnecessary actuation are identified and suitably addressed, and that the user is made aware of any changes to the building that affect the operation of release mechanisms.

21.2.1 Inspection and servicing should be carried out by a competent person, with specialist knowledge of the relevant equipment, sufficient information regarding the equipment, and adequate access to spares, at intervals not exceeding six months.

NOTE 1 This may be carried out as part of the periodic inspection and servicing of the fire detection and fire alarm system.

NOTE 2 This is normally an outside organization, such as a fire alarm servicing organization; care needs to be taken to ensure that, if, for example, in-house employees are used for this task, they have equivalent competence to the technicians of a typical fire alarm servicing organization. Competence of a fire alarm servicing organization can be assured by the use of organizations that are third-party certificated, by a UKAS-accredited certification body, to carry out inspection and servicing of fire detection and fire alarm systems.

21.2.2 The log book for the fire detection and fire alarm system should be examined. It should be ensured that any faults in respect of release mechanisms, associated equipment or their circuits have received appropriate attention.

21.2.3 A visual inspection should be made to check whether structural or occupancy changes have affected compliance with the recommendations of this part of BS 7273. Particular care should be taken to verify whether:

a) all manual release controls necessary for compliance with this part of BS 7273 remain unobstructed and conspicuous;

b) any new electronically secured doors have been created without the provision of an adjacent manual release control; and

c) any changes to the layout, use or occupancy of an area makes the provision or siting of automatic fire detectors non-compliant with the recommendations of Clause **12**.

21.2.4 Any batteries needed for compliance with this part of BS 7273 should be checked in accordance with the equipment manufacturer's instructions.

21.2.5 All fire alarm sounders needed for correct operation of acoustically actuated release mechanisms should be checked for correct operation unless this work has been carried out as part of the inspection and servicing of the fire detection and fire alarm system within the previous three months.

21.2.6 Any fault indicators necessary for compliance with this part of BS 7273 should be checked, where practicable, by simulation of fault conditions.

21.2.7 All further checks and tests recommended by the manufacturer of the release mechanisms and associated equipment should be carried out.

21.2.8 On completion of the work, any outstanding defects should be reported to the premises management, an entry should be made in the log book of the fire detection and fire alarm system and a servicing certificate should be issued.

21.3 Recommendations for inspection and test over a 12 month period

NOTE The work described may be carried out over the course of two or more service visits during each 12 month period, and may be carried out as part of inspection and servicing of the fire detection and fire alarm system.

In addition to the work recommended in **21.2**, the following work should be carried out every year:

a) The switch mechanism of every manual release control necessary for compliance with this part of BS 7273 should be tested, either by removal of a frangible element, insertion of a test key or operation of the device as it would be operated in the event of fire.

b) All primary (non-rechargeable) batteries that are required to provide power for the correct operation of equipment necessary for compliance with this part of BS 7273 should be replaced.

c) A visual inspection should be made to confirm that all readily accessible cable fixings are secure and undamaged.

d) All further annual checks and tests recommended by the manufacturer of the release mechanisms and associated equipment should be carried out.

Annex A (informative) Applications for mechanisms for unlocking and releasing doors

A.1 Convenience

Convenience includes, for example, a situation in which the sliding entrance and exit doors of a building are operated automatically, usually by movement sensors. It would be inconvenient, for reasons of temperature control, energy efficiency, etc., for the doors to remain open at all times that the building is in use. Often, these exits form part of the means of escape in the event of fire. In such cases, it is normally required that the doors open permanently in the event of fire or failure of the power supply to the doors, until the fire alarm system is reset or power is restored. Outside normal hours of occupation of the building, additional security measures are applied to prevent the doors opening in these circumstances.

Where the facilities are provided for convenience, false alarms, whether as a result of environmental influences, equipment faults or malicious operation of the fire alarm system, result in, at most, minor inconvenience, but, usually, no additional risk to occupants, nor any reduction in the accessibility of the building or part of the building. Similarly, if the facilities are arranged such that faults on the fire detection and fire alarm system cause the doors to open, such faults will result only in inconvenience.

A.2 Accessibility

Use of facilities for accessibility arises from the common use of self-closing fire doors in buildings. These doors are installed, most commonly, to provide protection of escape routes from fire, smoke and toxic gases. Accordingly, the doors are installed at entrances to stairways that need to be used for escape in the event of fire, across long corridors, and, sometimes, at entrances to rooms off corridors (e.g. in premises in which people sleep and in sections of corridor in which escape is possible only in a single direction).

The self-closing nature of these doors can be detrimental to accessibility, particularly for people with certain disabilities. Accordingly, it is often desirable for these doors to be held in the open position, or for them to be fitted with electrically powered free-swing door closers; the latter option is often adopted in the case of doors in residential care premises with frail or elderly occupants, particularly in the case of bedroom doors. In either case, the doors are released in the event of a fire signal, and they close under the action of a door closer. The use of the associated electrically powered hold-open devices might be required for accessibility under building regulations.

A.3 Security

Where such facilities are provided for accessibility, false alarms result in inconvenience. However, in some premises (e.g. with frail occupants) risk to occupants might also result from the sudden release of the doors without prior warning. This risk can also occur when the fire detection and fire alarm system is tested or if the facilities are arranged such that a fault signal on the fire detection and fire alarm system causes release of the doors; such fault signals can arise from events that are not necessarily associated with defects in the system, including removal of an automatic fire detector from its base.

In some buildings, there is a need to secure doors on the means of escape by, for example, use of electric door magnets, electromechanical locks or electromechanical strikes. Such arrangements are common in premises in which large sums of money are handled, certain hospitals, or departments within hospitals (such as post-natal units and mental health units), and in places of lawful detention, but can also be found in many other buildings in which there is a need for a relatively high level of security. Guidance on the security of buildings against crime, including the use of locking devices, is given in BS 8220. In these cases, it is essential that the doors are available for egress in the event of fire. However, false alarms and routine tests of the fire detection and fire alarm system could result in a breach in essential security provisions; such breaches might result in risk to occupants. If the doors are arranged to unlock in the event of a fault signal on the fire detection and fire alarm system, again such fault signals, including those arising from occurrences other than defects, could also result in risk to occupants, associated with the loss of security measures.

Annex B (normative) Selection of category of actuation

This Annex gives the category of system that should be adopted in each of a number of particular circumstances. The categories of actuation are given in the following tables:

a) actuation for release of self-closing fire doors, Table B.1;

b) actuation for release of electronically locked doors on means of escape, Table B.2; and

c) actuation for release of powered sliding doors on means of escape, Table B.3.

Where the position of any door matches more than one description, for each of which a different category of actuation is recommended, the highest recommended category should apply.

Table B.1 **Selection of category of actuation for release of self-closing fire doors (1 of 2)**

Location of door(s)	Category of actuation	Comments
1. In a compartment wall separating buildings	Critical (Category A)	In some circumstances, the use of electrically held-open doors might not be acceptable to enforcing authorities/bodies.
2. Forming part of the enclosures of any stairway in a hotel, boarding house, hall of residence, house in multiple occupation (HMO), hostel, residential care premises, a building containing apartments, a place of public entertainment or similar premises to any of the above (excluding hospitals)	Critical (Category A)	For hospitals, guidance documents on fire safety produced by the Department of Health or, in Scotland, NHS Scotland are appropriate.

Table B.1 **Selection of category of actuation for release of self-closing fire doors (2 of 2)**

Location of door(s)	Category of actuation	Comments
3. Forming part of the enclosures of a stairway that is the only stairway serving a building (or part of a building) which has more than one storey above or below the ground storey (other than in dwellings)	Critical (Category A)	-
4. Forming part of the enclosures of a stairway that forms part of means of escape (other than stairways described in items 2 and 3 and stairways in dwellings)	Any	In the case of Indirect (Category C) actuation, only if the critical signal path, and any wiring from non-fire alarm control equipment to the release mechanisms, fails safe.
5. Forming part of the enclosures of a fire-resisting lobby to stairways described in items 2 to 4 inclusive	Any	In the case of Indirect (Category C) actuation, only if the critical signal path, and any wiring from non-fire alarm control equipment to the release mechanisms, fails safe.
6. Subdividing corridors	Any	–
7. Any fire door in a dwelling, other than within the staircase enclosure of an HMO	Any	–
8. Any other locations, including (but not limited to) fire doors to rooms	Any	–

Table B.2 **Selection of category of actuation for release of electronically locked doors on means of escape from buildings (1 of 2)**

Type of premises	Category of actuation	Comments
1. Common places of work, not generally occupied by significant numbers of members of the public (e.g. offices, factories and warehouses), where staff are trained in the fire safety provisions in the building	Any	Acoustically actuated systems are not acceptable.

Table B.2 **Selection of category of actuation for release of electronically locked doors on means of escape from buildings (2 of 2)**

Type of premises	Category of actuation	Comments
2. Premises or the parts of premises occupied by, or open to, the public, including shops and shopping centres, hotels, boarding houses, public houses, cinemas, theatres, museums, galleries, leisure centres, transportation terminals and similar premises	Critical (Category A)	In many such premises, particularly those involving public entertainment or sale of alcohol, the use of electronically secured doors on means of escape is unacceptable to enforcing authorities/bodies. In some premises containing high value or rare contents, such as certain museums and galleries, a short delay prior to release of locks is sometimes adopted and should be regarded as a variation. In some premises, electronic security might be vital for reasons of public safety (e.g. at doors separating airside from landside at airports), and special requirements might then apply.
3. Hostels with long-term occupants, residential care premises and hospitals	Critical (Category A)	Electronically secured doors in some premises might be unacceptable to enforcing authorities/bodies. For hospitals, guidance documents on fire safety produced by the Department of Health are appropriate. Acoustically actuated systems are not acceptable. In some premises, electronic security might be vital for public safety and the safety of the occupants (e.g. in-patient mental health units) and release of locks as a result of various conditions under Critical (Category A) actuation (e.g. all fault conditions) is unlikely to be acceptable. Standard (Category B) or Indirect (Category C) actuation might be more appropriate in these situations.
4. Schools	Critical (Category A)	Electronically secured doors might not be acceptable to enforcing authorities/bodies.

Table B.3 **Selection of category of actuation for release of powered sliding doors on means of escape**

Type of premises	Category of actuation	Comments
1. Common places of work, not generally occupied by significant numbers of members of the public (e.g. offices, factories and warehouses), where staff are trained in the fire safety provisions in the building	Any	Acoustically actuated systems are not acceptable.
2. Premises occupied by, or open to, the public, including shops and shopping centres, hotels, boarding houses, public houses, cinemas, theatres, museums, galleries, leisure centres, transportation terminals and similar premises	Any	If doors cannot be opened by use of a handle or similar door furniture, only Critical (Category A) should be adopted.
3. Hostels with long-term occupants, residential care premises and hospitals	Any	If doors cannot be opened by use of a handle or similar door furniture, only Critical (Category A) should be adopted.
4. Schools	Any	If doors cannot be opened by use of a handle or similar door furniture, only Critical (Category A) should be adopted.

Annex C (informative) Typical actuation arrangements for release mechanisms

Typical actuation arrangements include:

a) connection of the power supply to the release mechanism via a relay at the fire alarm CIE, often described as the "common fire relay", so that the power supply is interrupted in the event of a fire signal [see Figure C.1a)];

b) connection of the power supply via an input/output unit connected to a fire detection circuit of an addressable fire detection and fire alarm system (see Figure C.2);

c) actuation of electrically powered hold-open devices by an acoustic signal (the audible fire signal in the building) (see Figure C.3);

d) actuation of electrically powered hold-open devices by a radio signal (or discontinuation of a radio signal) (see Figure C.4);

e) a combination of acoustic and radio interconnection is also possible (e.g. an acoustic signal can be used to trigger a radio transmitter) (see Figure B.5).

*NOTE 1 In practice, often connection is via a "slave" relay, operated from the common fire relay (see **17.4** and **18.4**).*

*NOTE 2 Fire and fault relays are shown in Figure C.1b); see commentary on Clause **9**.*

Figure C.1 **Use of relays at fire alarm CIE to actuate release mechanisms**

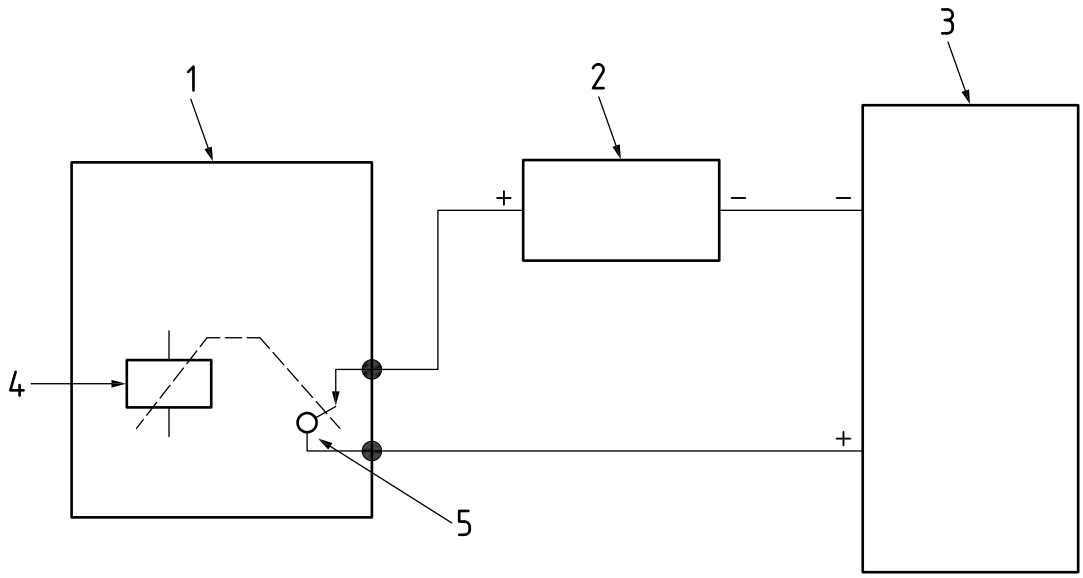

a) Common fire relay

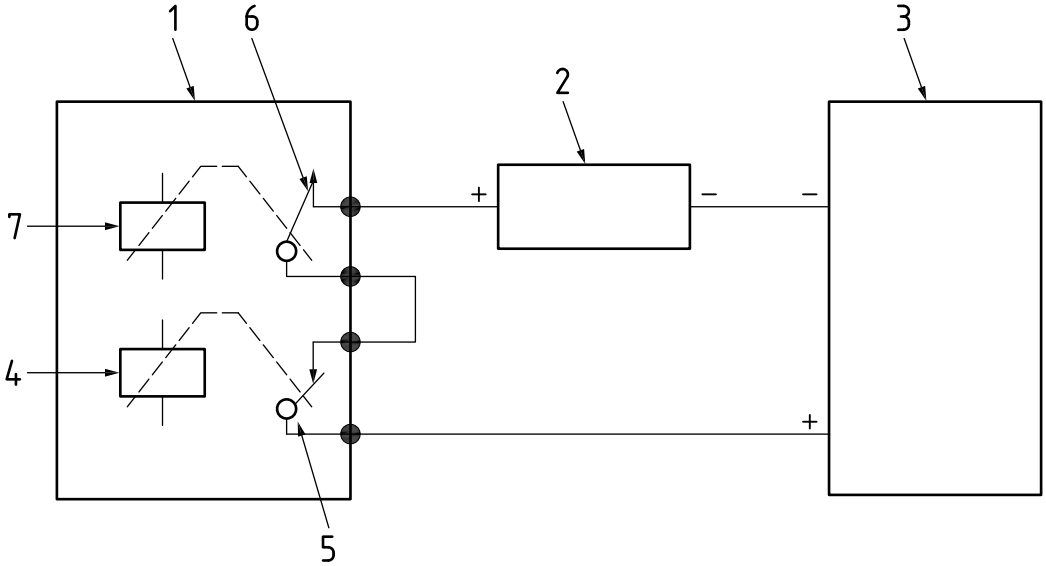

b) Fire and fault relays

Key

1 Fire alarm CIE
2 Power supply for release mechanism
3 Release mechanism
4 Common fire relay
5 Contacts normally closed, opening on alarm
6 Contacts held closed, opening on fault
7 Common fault relay

Figure C.2 **Use of addressable loop device to actuate release mechanisms**

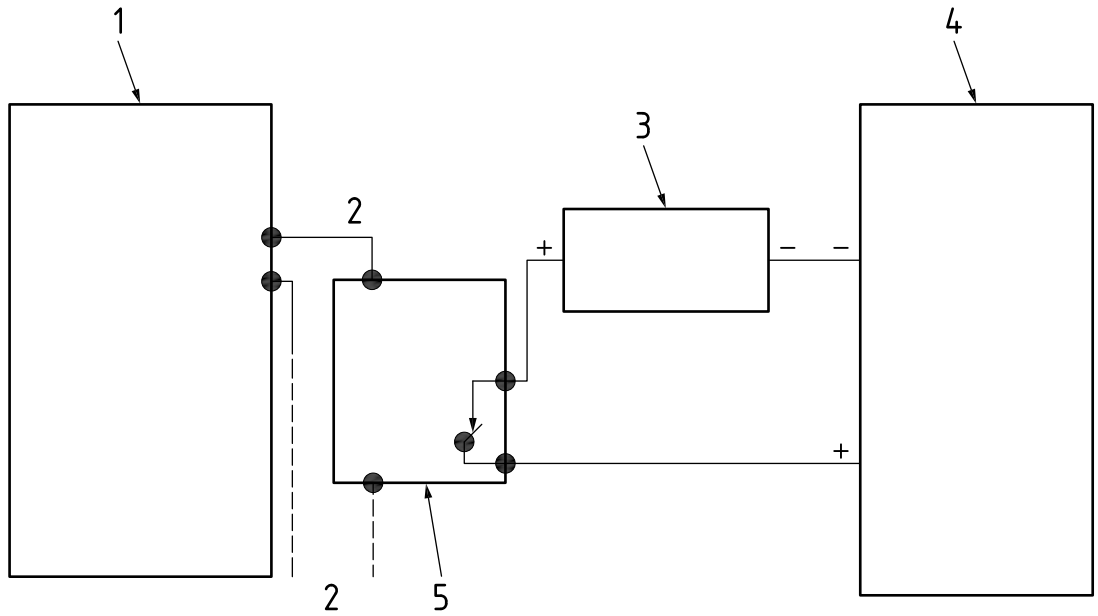

Key

1	Addressable fire alarm CIE	4	Release mechanism
2	Loop	5	Loop output interface unit
3	Power supply for release mechanism		

Figure C.3 **Acoustic actuation of release mechanisms**

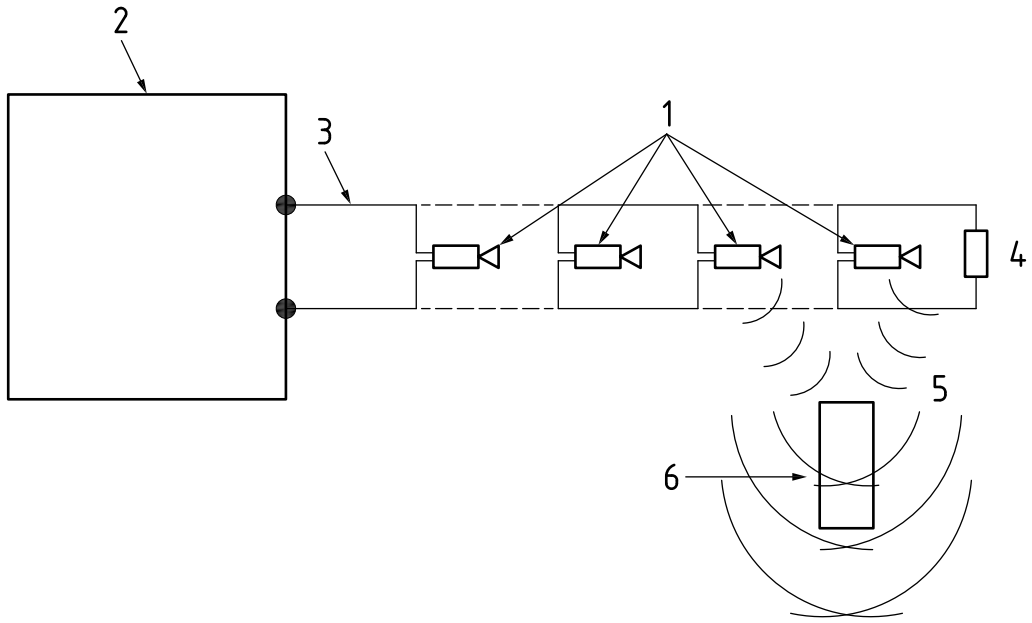

Key

1	Sounders	4	End of line device
2	Fire alarm CIE	5	Acoustic coupling
3	Sounder circuit	6	Hold-open device

Figure C.4 **Radio actuation of release mechanisms**

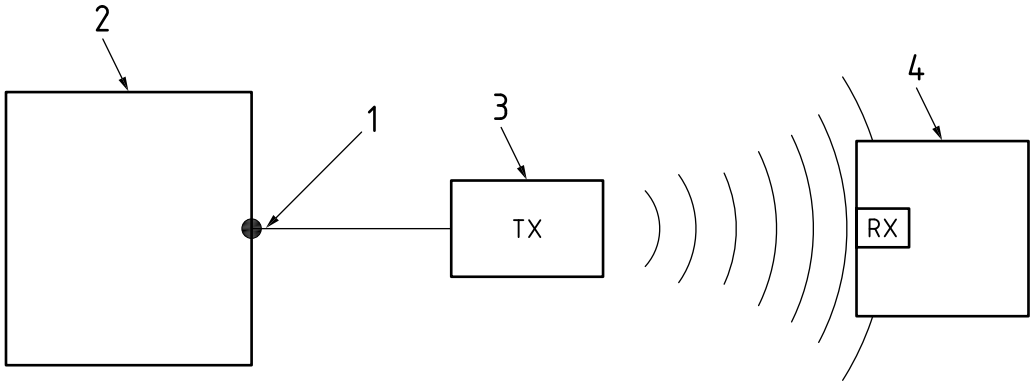

Key

1 Auxiliary output
2 Fire alarm CIE
3 Radio transmitter
4 Hold-open device incorporating radio receiver

Figure C.5 **Combined acoustic and radio actuation of release mechanisms**

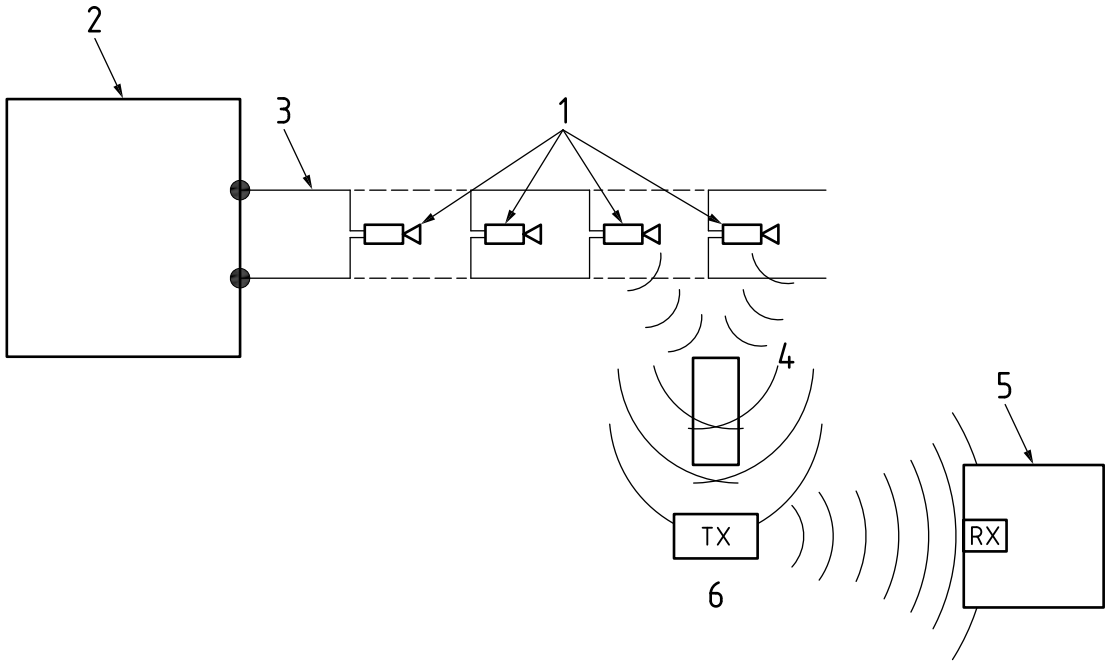

Key

1 Sounders
2 Fire alarm CIE
3 Sounder circuit
4 Acoustic coupling
5 Hold-open device incorporating radio receiver
6 Acoustic receiver radio transmitter

Annex D (informative) Example of a suitable sign for a manual release control

An example of a suitable sign for a manual release control is shown in Figure D.1.

Figure D.1 **Example of a suitable sign for a manual release control**

NOTE The pictogram shown is safety sign ISO 7010-E008 (BS EN ISO 7010:2012). It is represented here in black but the actual sign is green in accordance with BS EN ISO 7010:2012.

Annex E (informative) The advantages and disadvantages of acoustic actuation of release mechanisms

The advantages of acoustic actuation of release mechanisms include the following:

a) Since no wiring is needed between any part of the fire detection and fire alarm system and release mechanisms, the release mechanisms can be much easier, quicker and cheaper to install. Disruption of normal activities during installation is minimized, and additional release mechanisms can easily be added at a later date, to cater for modifications, or extensions, to the building.

b) The absence of wiring means that damage or disfigurement of existing surfaces is kept to a minimum. This can be particularly important in dealing with buildings having valuable or historic decoration.

c) In a building with a staff alarm arrangement, actuation of release mechanisms only occurs when fire alarm sounders operate, so minimizing unnecessary inconvenience, detriment to accessibility, and risk to occupants as a result of sudden release of self-closing doors, when false alarms occur.

d) Acoustic coupling does not result in unnecessary actuation of release mechanisms when cables are damaged.

e) Short-term, or urgent, provision of release mechanisms can be provided easily.

The disadvantages of acoustic actuation of release mechanisms include the following:

1) Acoustically-actuated release mechanisms cannot be used in situations in which Critical (Category A) actuation is necessary (see Clause **9**).

2) Acoustic coupling cannot transfer significant amounts of power. Each release mechanism has to be supplied with local power, normally from one or more internal batteries, which need to be replaced periodically. This adds to the work and cost of maintenance, and can result in unnecessary actuation of release mechanisms if batteries are not replaced at a sufficient frequency.

3) In buildings with a staff alarm arrangement, in which fire alarm sounders do not operate immediately when a fire signal is received at the fire alarm CIE, it is not possible to actuate release mechanisms until fire alarm sounders operate, were this considered desirable.

4) Acoustically-actuated release mechanisms can be actuated by sounds, other than that of fire alarm sounders, if these other sounds are of a sound pressure level similar to, or higher than, that of the fire alarm sounders, and are of sufficient duration, including signals from other alarm or warning systems (e.g. medical alarms in hospitals). This can result in unnecessary actuation of release mechanisms with consequent inconvenience, detriment to accessibility and risk to occupants as a result of sudden release of self-closing doors. This also makes acoustic actuation unsuitable in buildings with high ambient noise levels. (However, some systems use a combination of acoustic triggering of a radio actuation system to overcome this problem in buildings with high ambient noise levels.)

5) If the sound pressure level of fire alarm sounders at the location of a release mechanism is insufficient, the release mechanism will not be actuated. This could result from a defective fire alarm sounder, interference with a fire alarm sounder by occupants as a result of irritation with high sound pressure level or constant false alarms, or from changes in the building (e.g. erection of new partitions or cellular offices). The insufficient sound pressure level might not be perceived by occupants as inadequate audibility in the areas that they occupy at the time of weekly tests of the fire detection and fire alarm system. Since the acoustically coupled part of the critical signal path cannot be monitored or fail-safe, this makes stringency of routine testing (see **21.1**) more critical.

Annex F (informative) The advantages and disadvantages of radio actuation of release mechanisms

The advantages of radio actuation of release mechanisms include the following:

a) Since no wiring is needed between any part of the fire detection and fire alarm system and release mechanisms, the release mechanisms can be much easier, quicker and cheaper to install. Actuation of release mechanisms in areas served by another fire detection and fire alarm system is also possible. Disruption of normal activities during installation is minimized, and additional release mechanisms can easily be added at a later date, to cater for modifications, or extensions, to the building.

b) The absence of wiring means that damage or disfigurement of existing surfaces is kept to a minimum. This can be particularly important in dealing with buildings having valuable or historic decoration.

c) Individual addressing of particular release mechanisms, or groups of release mechanisms, might also be possible.

d) As the extent to which cables are used is minimized, there is much less exposure to damage to cables of the critical signal path and consequent unnecessary actuation of release mechanisms.

e) Short-term, or urgent, provision of release mechanisms can be provided easily.

f) On some systems, radio repeater units can be easily added to extend coverage.

The disadvantages of radio actuation of release mechanisms include the following.

1) As it is not always appropriate to send radio signals continuously for monitoring purposes, in some systems, in the event of failure of the radio-linked part of the critical signal path, the delay in consequent fail-safe actuation of release mechanisms is likely to be longer than in the case of a hardwired system.

2) Radio links cannot transfer significant amounts of power. Each release mechanism has to be supplied with local power, normally from one or more internal batteries, which need to be replaced periodically. This adds to the work and cost of maintenance, and can result in unnecessary actuation of release mechanisms if batteries are not replaced at a sufficient frequency.

3) There is the possibility of the radio path being interrupted by temporary or permanent screening. This will, however, result in actuation of the release mechanisms, but, in the interval before the mechanisms are released, in systems that actuate release mechanisms by transmission of a radio signal, rather than discontinuation of a frequently transmitted signal, there can be a significant period for which actuation of release mechanisms is not possible.

4) The possibility exists that the receiver at the release mechanism might be blocked by interfering signals from other sources. The frequencies used for radio signalling are not protected by licensing from other interfering signals on these frequencies.

Radio communications may also be used to link a small number of release mechanisms to what is essentially a hardwired critical signal path. In such a case, the recommendations given in this part of BS 7273 apply to the radio-linked parts of the critical signal path.

Annex G (informative) Model commissioning certificate

A model commissioning certificate is shown in Figure G.1.

Figure G.1 **Model commissioning certificate**

Certificate of commissioning for the electrically powered hold-open device(s)/electric door magnet(s)/ electronic locks/powered sliding doors (*delete as appropriate*) at:

Address: .....

.....

I/we being the person(s) responsible (as indicated by my/our signatures below) for the commissioning of the above, particulars of which are set out below, CERTIFY that the equipment and release arrangements I/we have commissioned complies to the best of my/our knowledge and belief with the recommendations of BS 7273-4:2015 for the category of actuation described below, except for the variations, if any, stated in this certificate.

Name (in block letters): ..... Position: .....

Signature: ..... Date: .....

For and on behalf of: .....

Address: .....

.....

..... Postcode: .....

The extent of liability of the signatory is limited to the equipment and arrangements described below.

Category of actuation (see BS 7273-4:2015, Clause **4**): .....

Variations from the recommendations of BS 7273-4 (see BS 7273-4:2015 Clause **6**):

.....

.....

.....

.....

.....

.....

Brief description of release mechanisms, method(s) of actuation (see BS 7273-4:2015, Clause **7**) and interface design (see BS 7273-4:2015, Clause **9**).

.....

.....

.....

.....

☐ All equipment operates correctly.

☐ Installation work is, as far as can reasonably be ascertained, of an acceptable standard.

☐ I/we have carried out commissioning in accordance with the recommendations of BS 7273-4:2015, Clause **20**.

☐ Suitable documentation has been provided to the user (see BS 7273-4:2015, **20.6**)

The following work should be completed before/after (delete as applicable) release mechanisms become operational:

.....

.....

.....

.....

Maintenance

It is strongly recommended that, after completion, the system is maintained in accordance with BS 7273-4:2015, Clause 21

User responsibilities

The user should appoint a responsible person to supervise routine testing of release mechanisms in accordance with BS 7273-4:2015, 21.1, and to supervise all matters pertaining to the associated fire detection and fire alarm system in accordance with BS 5839-1:2013, Section 7.

Bibliography

Standards publications

For dated references, only the edition cited applies. For undated references, the latest edition of the referenced document (including any amendments) applies.

BS 476-22, *Fire tests on building materials and structures – Part 22: Method for determination of the fire resistance of non-loadbearing elements of construction*

BS 5266-1, *Emergency lighting – Part 1: Code of practice for the emergency lighting of premises*

BS 5266-8 (BS EN 50172), *Emergency escape lighting systems*

BS 8220 (all parts), *Guide for security of buildings against crime*

BS EN 1838, *Lighting applications – Emergency lighting*

BS EN 14846, *Building hardware – Locks and latches – Electromechanically operated locks and striking plates – Requirements and test methods*

BS EN 14637, *Building hardware – Electrically controlled hold-open systems for fire/smoke door assemblies – Requirements, test methods, application and maintenance*

Other publications

[1] GREAT BRITAIN. Building Regulations 2010 (SI No. 2214 2010) and subsequent amendments. London: The Stationery Office.

[2] GREAT BRITAIN. Building Regulations (Northern Ireland) 2012 (SRNI No. 192 2012) and subsequent amendments. Belfast: The Stationery Office.

[3] SCOTLAND. Building (Scotland) Regulations 2004 (SSI No. 2004 406) and subsequent amendments. Edinburgh: The Stationery Office.

[4] GREAT BRITAIN. Regulatory Reform (Fire Safety) Order 2005 (SI No. 1541 2005). London: The Stationery Office.

[5] SCOTLAND. Fire (Scotland) Act 2005 as amended. Edinburgh: The Stationery Office.

[6] SCOTLAND. Fire Safety (Scotland) Regulations 2006. Edinburgh: The Stationery Office.

[7] NORTHERN IRELAND. The Fire and Rescue Services (Northern Ireland) Order 2006. Belfast: The Stationery Office.

[8] NORTHERN IRELAND. Fire Safety Regulations (Northern Ireland) 2010. Belfast: The Stationery Office.

[9] GREAT BRITAIN. Equality Act 2010. London: The Stationery Office.

[10] GREAT BRITAIN. Health Technical Memorandum 05-03: Operational Provisions – Part B: Fire Detection and Alarm Systems. London: The Stationery Office, 2007. ISBN 9780113227617.

[11] BRE RESEARCH FOR INDUSTRY. Smoke movement in corridors. RFI 7. Borehamwood: Fire Research Station, 1983.

[12] GREAT BRITAIN. Electromagnetic Compatibility Regulations 2006. London: The Stationery Office.

[13] EUROPEAN COMMUNITIES. 204/108-EC. Council Directive 89/336/EEC of 3 May 1989 on the approximation of the laws of the Member States relating to electromagnetic compatibility. Luxembourg: Office for Official Publications of the European Communities, 1999.

[14] EUROPEAN COMMUNITIES. 1995/5/EC. Directive 1999/5/EC of the European Parliament and of the Council of 9 March 1999 on radio equipment and telecommunications terminal equipment and the mutual recognition of their conformity. Luxembourg: Office for Official Publications of the European Communities, 1999.

Further reading

BS EN ISO 9001, *Quality systems – Requirements*

This page deliberately left blank

This page deliberately left blank

British Standards Institution (BSI)

BSI is the national body responsible for preparing British Standards and other standards-related publications, information and services.

BSI is incorporated by Royal Charter. British Standards and other standardization products are published by BSI Standards Limited.

About us

We bring together business, industry, government, consumers, innovators and others to shape their combined experience and expertise into standards -based solutions.

The knowledge embodied in our standards has been carefully assembled in a dependable format and refined through our open consultation process. Organizations of all sizes and across all sectors choose standards to help them achieve their goals.

Information on standards

We can provide you with the knowledge that your organization needs to succeed. Find out more about British Standards by visiting our website at bsigroup.com/standards or contacting our Customer Services team or Knowledge Centre.

Buying standards

You can buy and download PDF versions of BSI publications, including British and adopted European and international standards, through our website at bsigroup.com/shop, where hard copies can also be purchased.

If you need international and foreign standards from other Standards Development Organizations, hard copies can be ordered from our Customer Services team.

Subscriptions

Our range of subscription services are designed to make using standards easier for you. For further information on our subscription products go to bsigroup.com/subscriptions.

With **British Standards Online (BSOL)** you'll have instant access to over 55,000 British and adopted European and international standards from your desktop. It's available 24/7 and is refreshed daily so you'll always be up to date.

You can keep in touch with standards developments and receive substantial discounts on the purchase price of standards, both in single copy and subscription format, by becoming a **BSI Subscribing Member**.

PLUS is an updating service exclusive to BSI Subscribing Members. You will automatically receive the latest hard copy of your standards when they're revised or replaced.

To find out more about becoming a BSI Subscribing Member and the benefits of membership, please visit bsigroup.com/shop.

With a **Multi-User Network Licence (MUNL)** you are able to host standards publications on your intranet. Licences can cover as few or as many users as you wish. With updates supplied as soon as they're available, you can be sure your documentation is current. For further information, email bsmusales@bsigroup.com.

Revisions

Our British Standards and other publications are updated by amendment or revision.

We continually improve the quality of our products and services to benefit your business. If you find an inaccuracy or ambiguity within a British Standard or other BSI publication please inform the Knowledge Centre.

Copyright

Useful Contacts:

Customer Services
Tel: +44 845 086 9001
Email (orders): orders@bsigroup.com
Email (enquiries): cservices@bsigroup.com

Subscriptions
Tel: +44 845 086 9001
Email: subscriptions@bsigroup.com

Knowledge Centre
Tel: +44 20 8996 7004
Email: knowledgecentre@bsigroup.com

Copyright & Licensing
Tel: +44 20 8996 7070
Email: copyright@bsigroup.com

BSI Group Headquarters

389 Chiswick High Road London W4 4AL UK

bsi.

...making excellence a habit.™